TRANSPORTATION AND MOBILITY COMMISSION MEETING MINUTES

Vancouver City Hall – Aspen Room – 415 W. Sixth Street
PO Box 1995 – Vancouver, Washington 98668-1995
www.cityofvancouver.us

Jeananne Edwards · Connor Godsil · Corey Grandstaff · Leah Jackson ·
Mike Paine · Mario Raia · Eduardo Ramos · Derya Ruggles · Ken Williams

June 6, 2023

CALL TO ORDER AND ROLL CALL

The June 6, 2023 meeting of the Transportation and Mobility Commission (TMC) was called to order at 4:01 p.m. by Chair Ramos.

Present: Chair Eduardo Ramos, Vice Chair Jeananne Edwards, Commissioners Connor Godsil, Corey Grandstaff, Leah Jackson, Mike Paine, Mario Raia, and Ken Williams

Absent: Derya Ruggles

ACTION ITEMS

ADOPTION OF MINUTES

Commissioner Jackson requested an amendment to the summary of the Columbia Street Project Update to include her request to update the status of the project.

Motion by Commissioner Williams, seconded by Vice Chair Edwards, and carried unanimously to approve the May minutes as amended by Commissioner Jackson.

WORKSHOP

McGillivray Blvd Safety & Mobility Project
Emily Benoit, Senior Transportation Planner, CDD; Kara Hall, Fehr & Peers

Emily Benoit reviewed the phase 1 project goals and outcomes and the accompanying evaluation criteria. Kara Hall presented existing conditions on McGillivray Blvd, including traffic volumes, level of service and queuing at intersections along the corridor, vehicle speeds, and signal warrants. The pedestrian and small mobility experience was evaluated, including a review of sidewalk coverage and crossings, mobility lanes, the bicycle level of traffic stress, and transit routes and stops. Staff reviewed safety and collisions by mode, collision rates and types, and an analysis of parking utilization and illumination.

The bullets below summarize the Commission's questions and staff responses:

- Consideration of a traffic roundabout instead of stoplights. Staff responded there is no specific warrant for roundabout installation, so it was not evaluated in depth for this project. It is something to consider as a long-term solution as roundabouts do have strong safety advantages.

- Was pedestrian level of stress investigated. Staff responded the bicycle level of stress is used as a proxy for pedestrians as they are rated on similar characteristics such as vehicle volumes and speeds.
- What is measured in warrants for adding a signal. Staff responded signal warrants include peak hour, 8-hour and 4 -hour traffic volume collection, train crossing (doesn't apply in this case), and school and safety related warrants. Staff is doing a deeper dive into the safety warrant given the number of collisions at intersections on the corridor to see if a signal is warranted for safety reasons even when volumes do not meet the threshold.
- Addressing tree roots in roads and stormwater management. Staff responded the tree roots will be addressed during repaving and there are known issues west of 136th. For stormwater, staff will evaluate where there are issues and mitigate where possible, but also acknowledged the project scope is focused on work between the curbs and implementable through the pavement program.

Staff concluded the presentation with next steps, including developing design options and evaluation criteria to address the project goals.

Commissioner Grandstaff departed the meeting.

WORKSHOP
Jefferson – Kauffman 60% Design
Hassan Abdalla, Transportation Engineering Manager, Public Works

Hassan Abdalla presented historical context of this project and the project objectives and opportunities. The project presentation included the planned realignment of Jefferson and Kauffman, the multiuse path along this corridor, cross sections of Jefferson Street, W. 13th Street, and Markle Avenue. Hassan also presented on project funding and schedule for the remainder of the project through construction.

The bullets below summarize the Commission's questions and staff responses:

- Explain the section of Kauffman at Mill Plain. Staff responded in that section there is sidewalks on each side and three lanes for vehicle traffic, one for through traffic in each direction and one left WB turn lane that will also include a bike box for left turns.
- What movements are prioritized in this realignment project? Staff responded the project and roadway realignment is primarily for freight mobility. If it was converted to a one way, freight would be split onto two different corridors with more interactions with other users.
- How does this project interact with TIP project to add mobility lanes to 11th Street from King Street to the Amtrak station. Commissioners are concerned that sidewalk curb bulbouts could preclude a future mobility lane. Staff responded they will look into how those two projects intersect.
- Traffic patterns at the intersection of Kauffman and W. Mill Plain. Staff responded they would look into the traffic patterns and turn movements at this intersection to review whether the left turn pocket is still needed.
- Freight routes in this area, including on Washington and Evergreen. Staff responded the intent is to have freight on Mill Plain and Kauffman to Jefferson.
- Raised sidewalks for bicyclists. Staff responded they did consider raised sidewalks across intersections in the initial design discussions. Maintenance staff expressed concerns with that option due to issues with stormwater drainage and ongoing maintenance.

- Public outreach for this project. Staff responded there have been discussions with the landowners who are affected by the project and will consider an open house event in the future to get additional feedback from those in the area.

STAFF COMMUNICATIONS

Two new Commissioners will join the Transportation and Mobility Commission in August, representing a transportation professional and driving as a primary mode. Staff will onboard the new Commissioners in July.

The November TMC meeting has been canceled due to staff attending a conference out of state on the first Tuesday in November.

Kate Drennan presented the Communications Agenda Item regarding the 112th Avenue Safety and Mobility Project. It is currently in the existing conditions phase, and the Project Team is collecting traffic counts, crash history, bike and pedestrian counts, and C-TRAN ridership. Public outreach will start this summer to gather information on how people use the corridor and what they might like to see changed.

Motion by Commissioner Jackson, seconded by Commissioner Raia, and carried unanimously to amend the agenda to move the staff communication to after the Jefferson-Kauffman workshop.

Motion by Vice Chair Edwards, seconded by Commissioner Jackson, and carried unanimously to excuse the absence of Commissioner Ruggles.

Commissioner Paine joined the meeting.

COMMUNITY FORUM

Jason Cromer was present to discuss the Main Street Promise project and encouraged the Commission to push for a more pedestrian focused design. He also encouraged the Commission to advocate for more traffic calming measures installed throughout the City, as the Police Department is unable to enforce traffic violations due to staffing issues.

WORKSHOP

Transportation System Plan (TSP) Update
Kate Drennan, Principal Transportation Planner, CDD; Stephanie Wright, Nelson/Nygaard

Kate Drennan reviewed the TSP schedule, the chartering process, and alignment with the City's Strategic Plan goals. Stephanie Wright presented an overview of funding for capital projects and delivery of programs and projects, the current funding strategy, trends in transportation spending and population growth. Next Stephanie presented on the updated prioritization framework for TSP projects, discussed a reprioritization of the existing projects in the TIP and CFP, updates to funding models such as leveraging development for transportation improvements, adding small mobility projects to the Transportation Impact Fees project list, and new grant opportunities.

The bullets below summarize the Commission's questions and staff responses:

- What is the stability of the Street Funding Strategy revenue. Staff responded they expect to continue to receive this revenue, as it is part of a tax that was recently increased and extended by City Council.

- Can grant funds received for a specific project be shifted to other projects? Staff responded grant funds must be used for the project it was awarded for. However, grant funding for a project may make local funding that was allocated to that project available for a different project.
- Inclusion of grant availability on the list of questions about when to invest in a project. Staff responded grant funding is pursued for projects that have already been prioritized for near-term implementation as it is beneficial to have a degree of demonstrated design and community planning processes .
- Reviewing the concurrency standards. Staff responded they will be looking at opportunities to update the policy and include other measures to assess roadway performance.

The presentation continued with the TSP Capital Projects list that focuses on walking and small mobility focused projects needed to implement the pedestrian and bike and small mobility modal networks, as well as other policies.

The bullets below summarize the Commission's questions and staff responses:

- The Main Street project is listed as a pedestrian project, but thought it was intended to include small mobility as well. Staff responded Upper Main Street does have a focus on small mobility connection to the Burnt Bridge Creek crossing, and south of that area is more pedestrian focused.
- Including this list of projects on the City website. Staff responded these projects aren't currently on the website but will be included in the TSP Plan and could consider incorporating them into an interactive map that also includes the modal networks.
- Is there a mechanism to identify projects on the list that are ready to pursue funding. Staff responded we track grant opportunities and the types of projects that might be eligible for those grants on an internal spreadsheet

COMMISSION COMMUNICATION

Commissioner Williams thanked the City for installing sidewalks on Devine Road.

Chair Ramos shared that he has joined the Comprehensive Plan Update Group.

ADJOURNMENT 7:37 PM

_____
Eduardo Ramos, Chair

Meetings of the Transportation Mobility Commission are electronically recorded on audio. The audio is kept for a period of six years.

To request other formats, please contact: Julie Nischik | 360-487-7813 | Relay: 711 | Julie.Nischik@cityofvancouver.us

C-TRAN

Highway 99 Bus Rapid Transit Project

August 1, 2023
City of Vancouver Transportation & Mobility Commission
Taylor Eidt, C-TRAN

« OUR COMMUNITY, OUR PROMISE »

Presentation Overview & Purpose

Overview

- Corridor Locally Preferred Alternative
- Early Corridor Design Overview
- Project Timeline

Purpose

- Collect feedback and update TMC on progress of Highway 99 BRT Project

Locally Preferred Alternative

- **Mode:** Bus Rapid Transit
- **Alignment:** Highway 99/Main Street
- **Length:** 10 miles
- **Southern Terminus:** Vancouver Waterfront
- **Northern Terminus:** WSU Vancouver
- **Stations:** 33 new & 4 existing

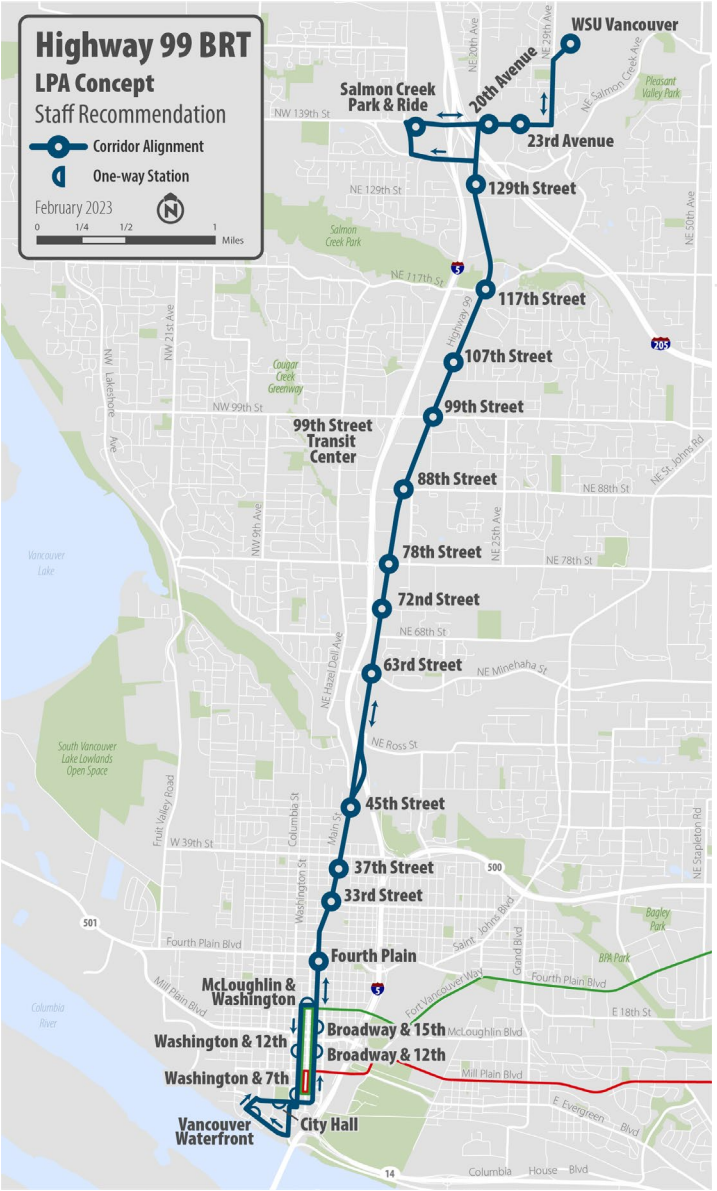

« C-TRAN: OUR COMMUNITY, OUR PROMISE »

Design & Engineering

- Project is currently in early design phase
- Many project elements are likely to change or shift moving forward
- City of Vancouver stations plus select examples from Clark County
- Bike bypass station design

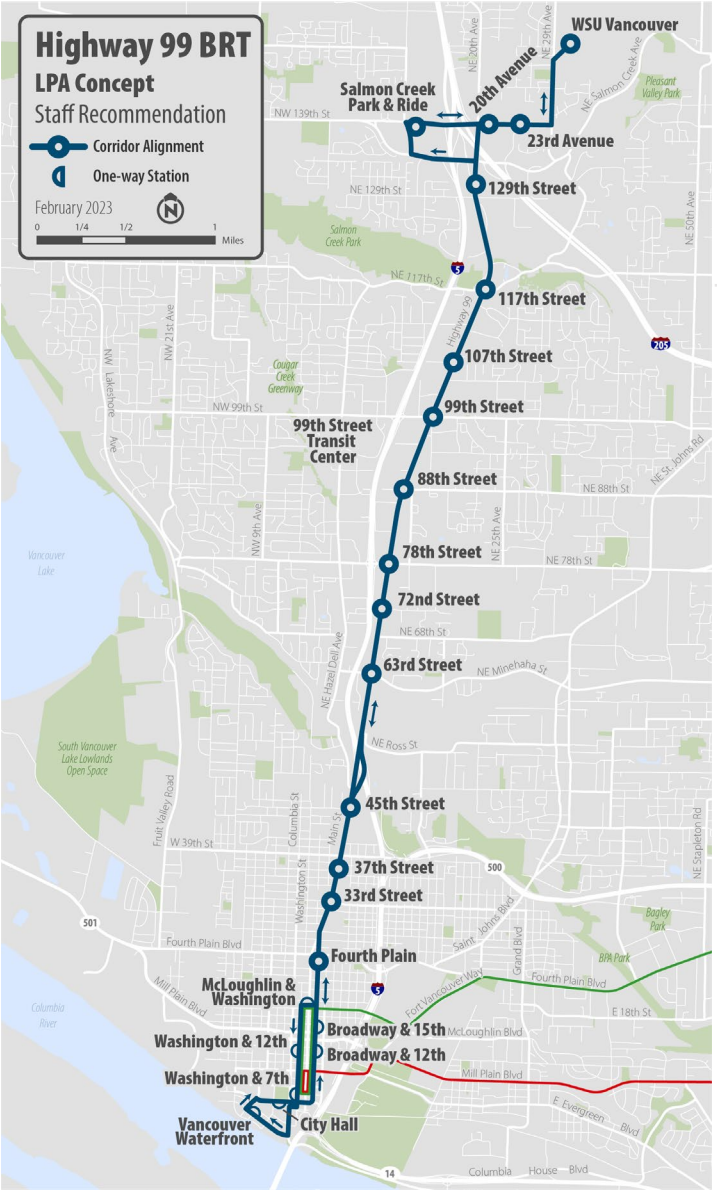

Waterfront (southern terminus)

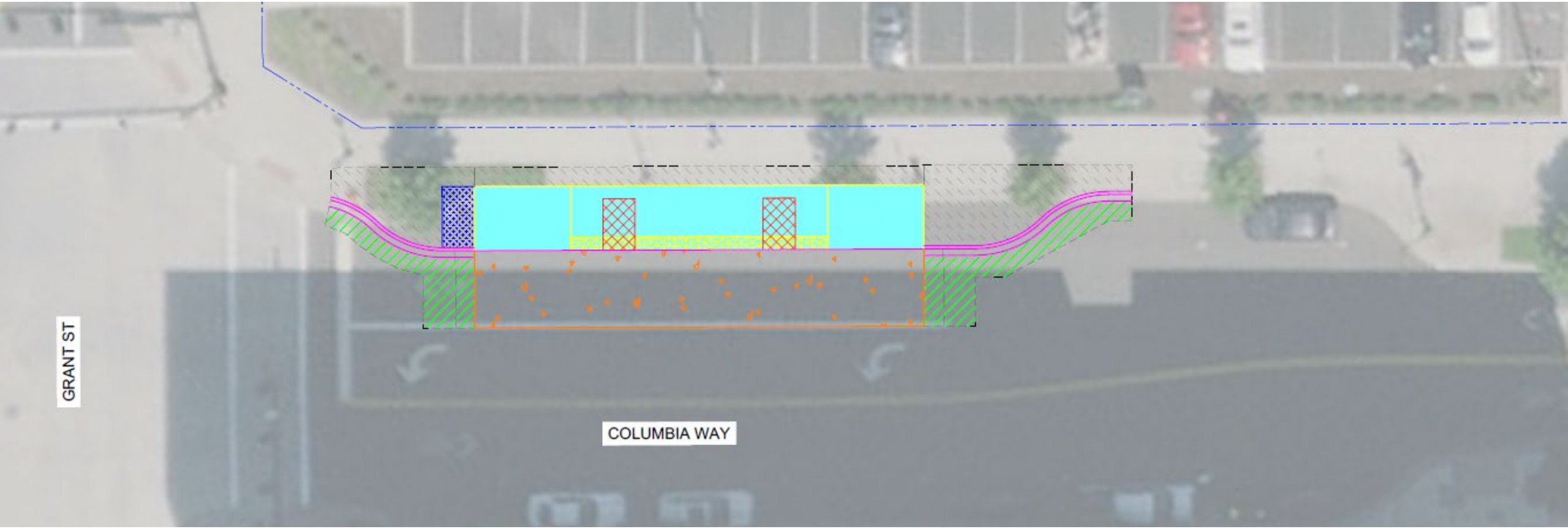

City Hall (northbound)

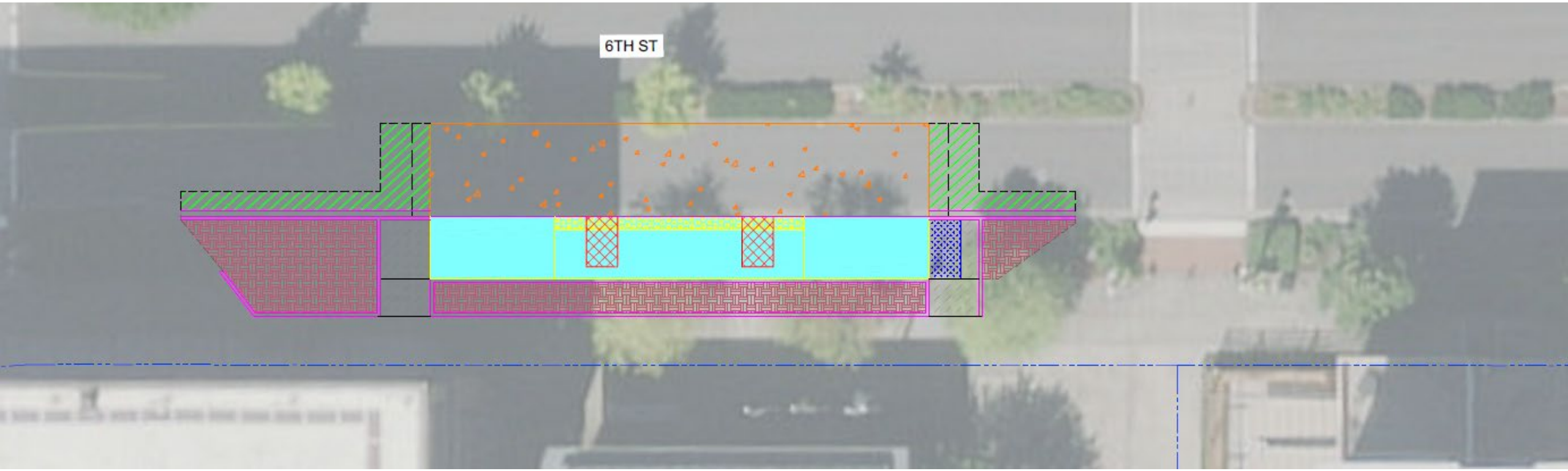

Washington & 7th Street (southbound)

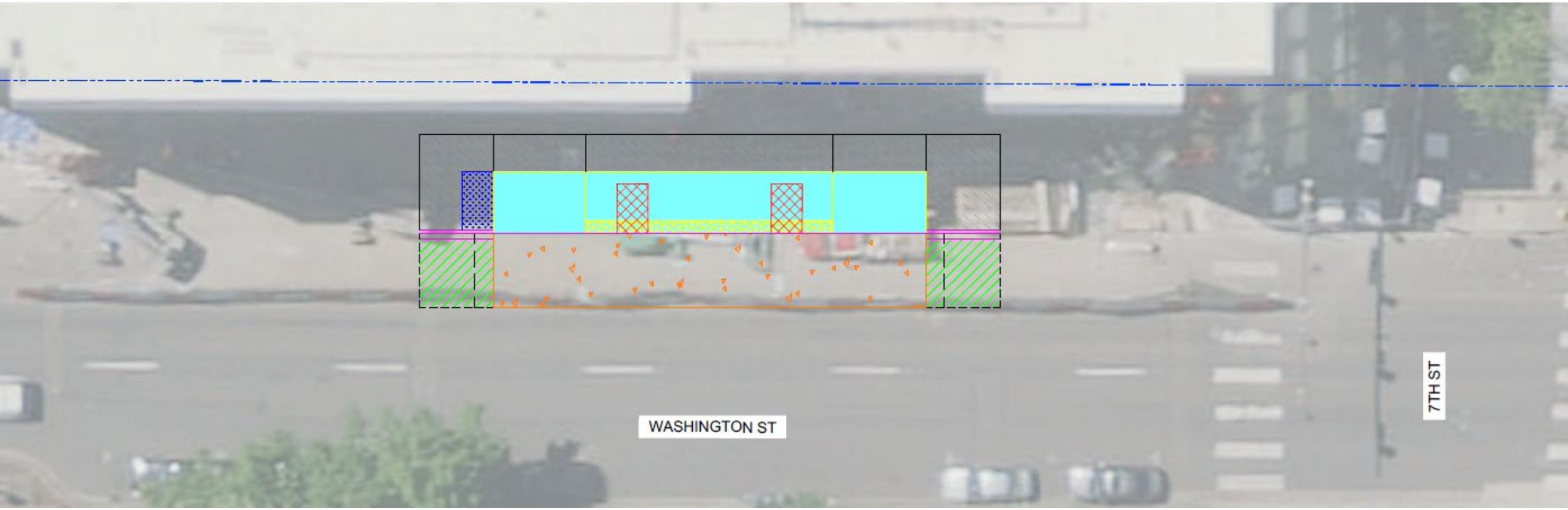

Washington & Broadway (existing stations)

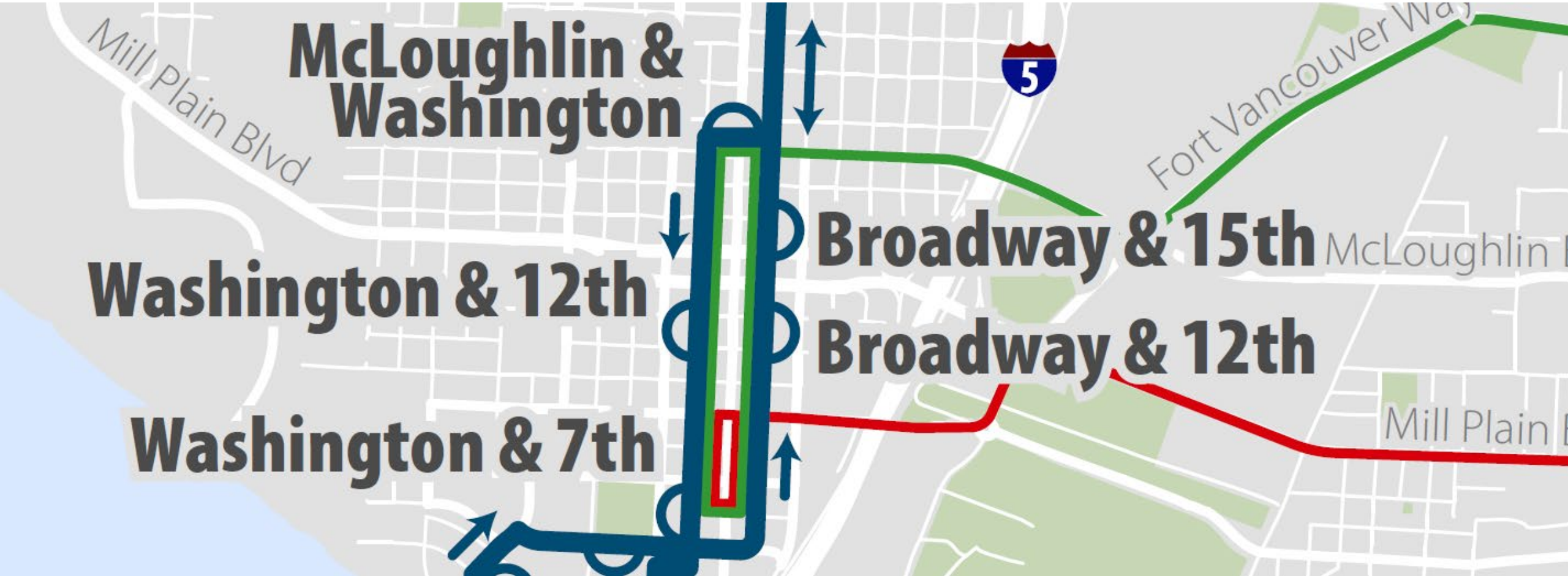

Broadway & Fourth Plain

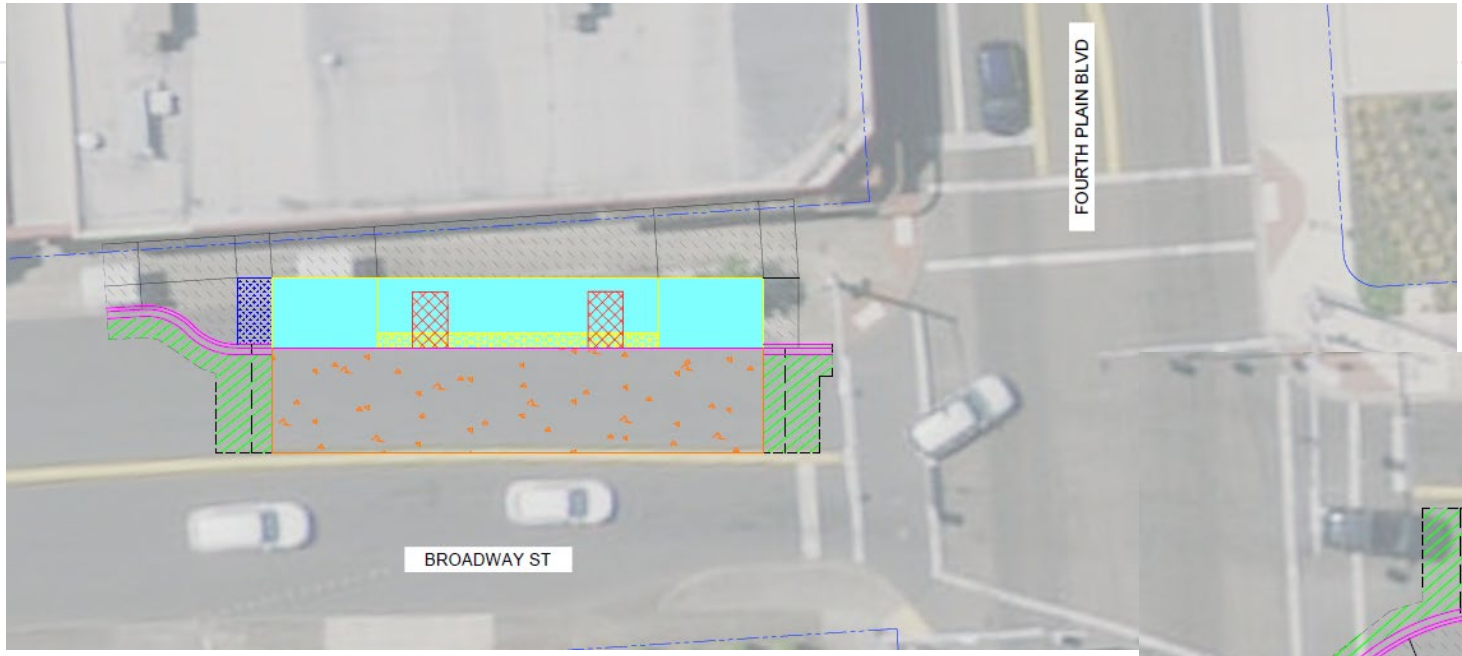

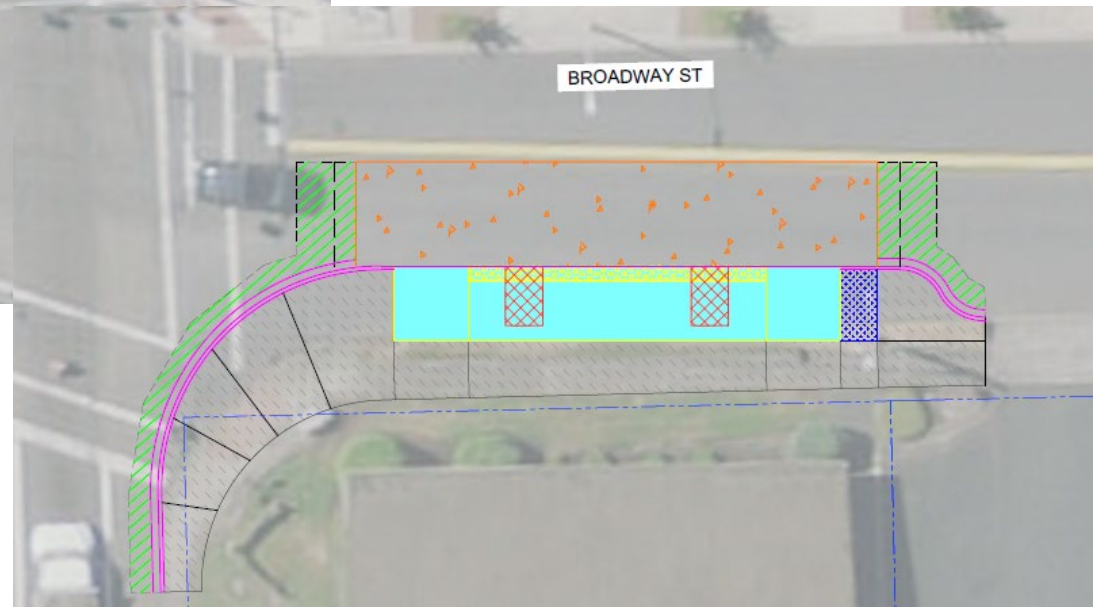

Main & 33rd Street

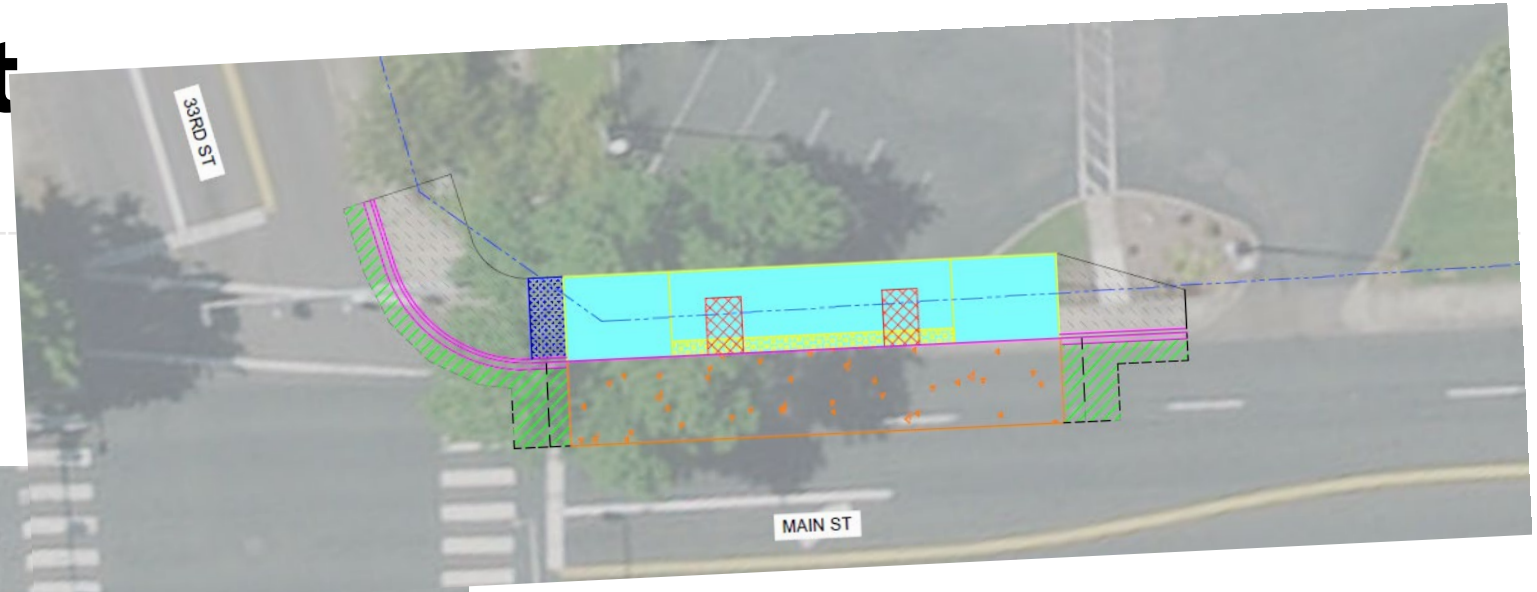

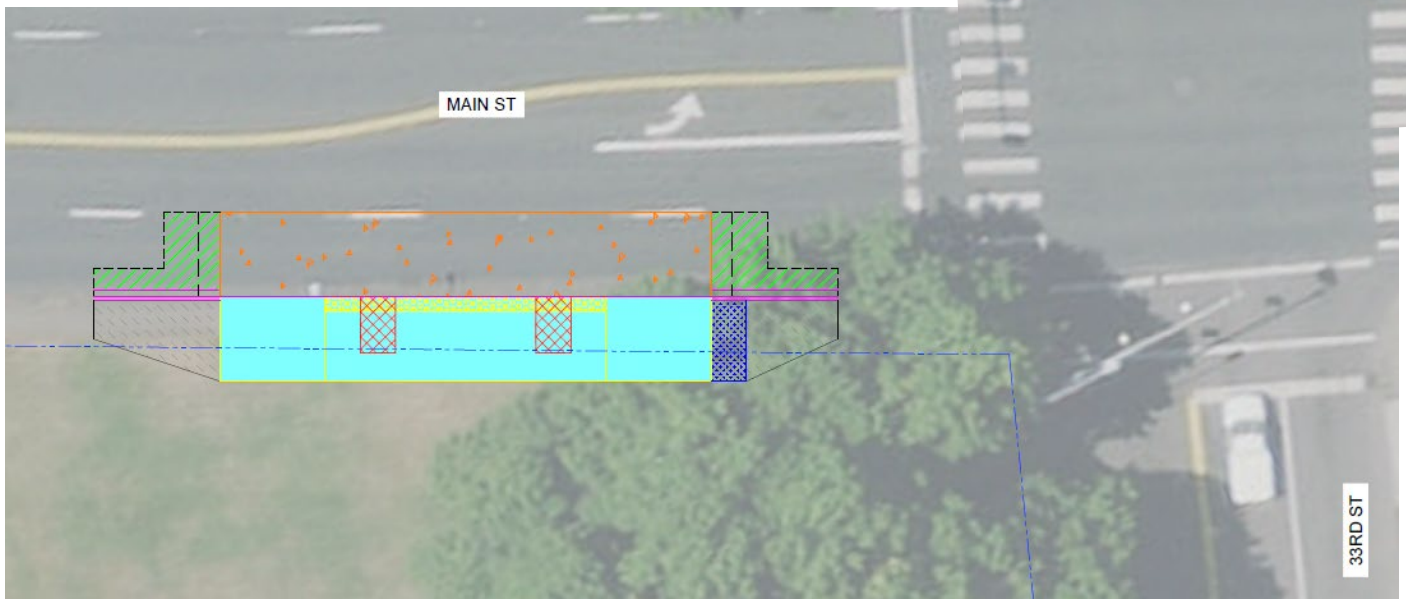

Main & 36th (southbound)/37th (northbound)

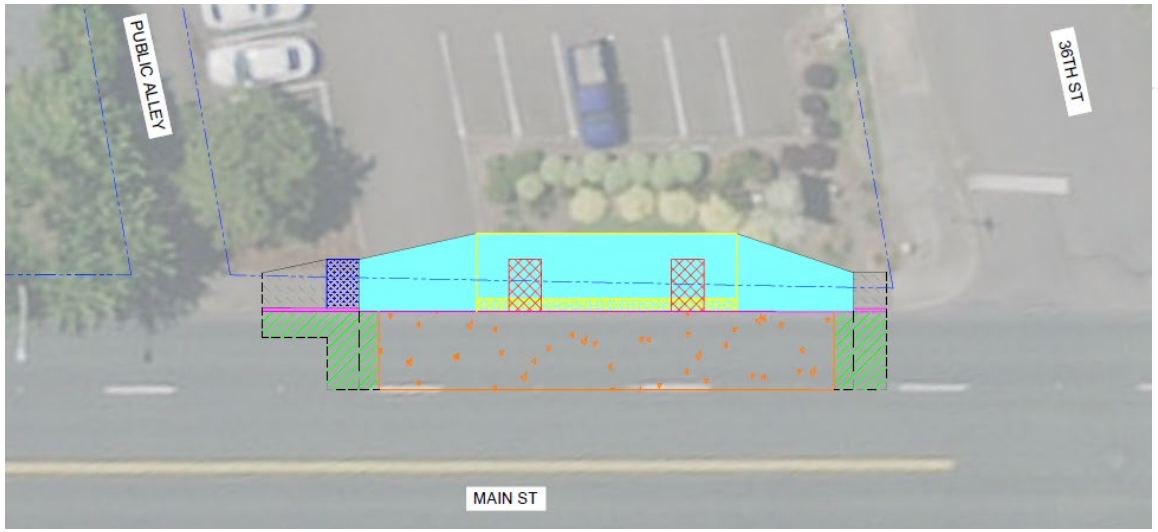

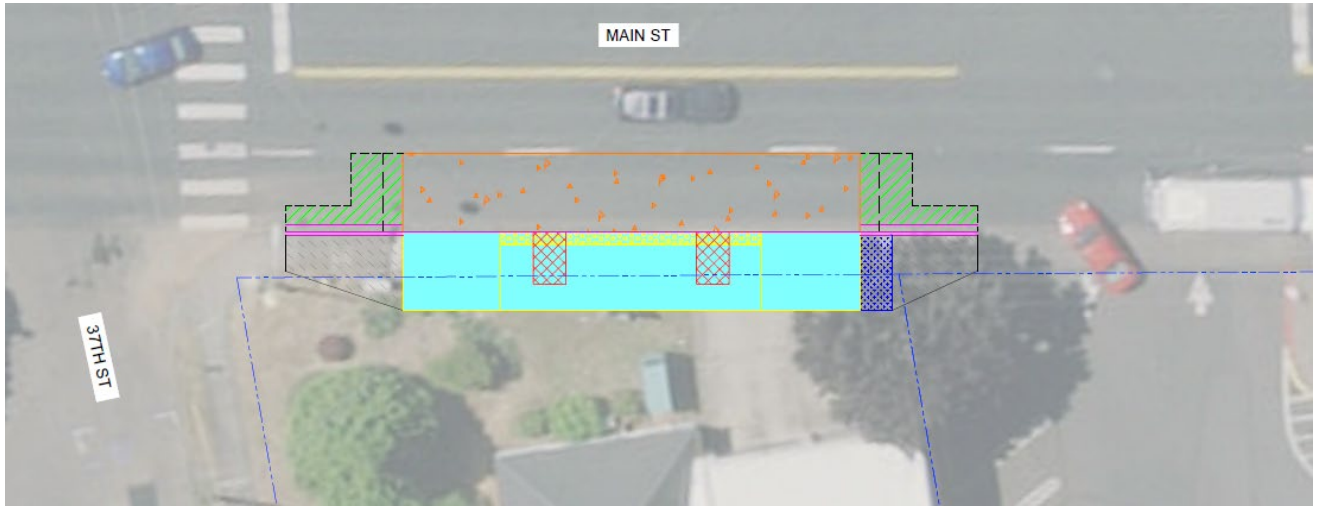

Main & 45th Street

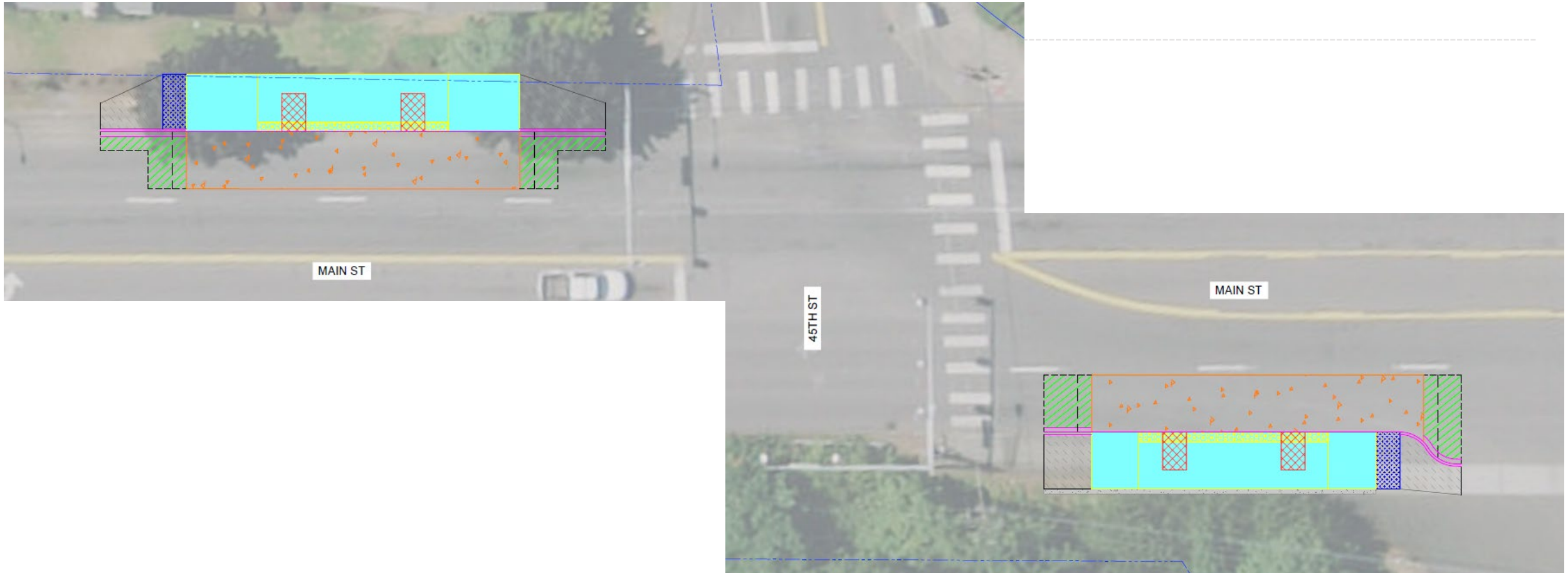

Highway 99 & 78th Street (northbound)

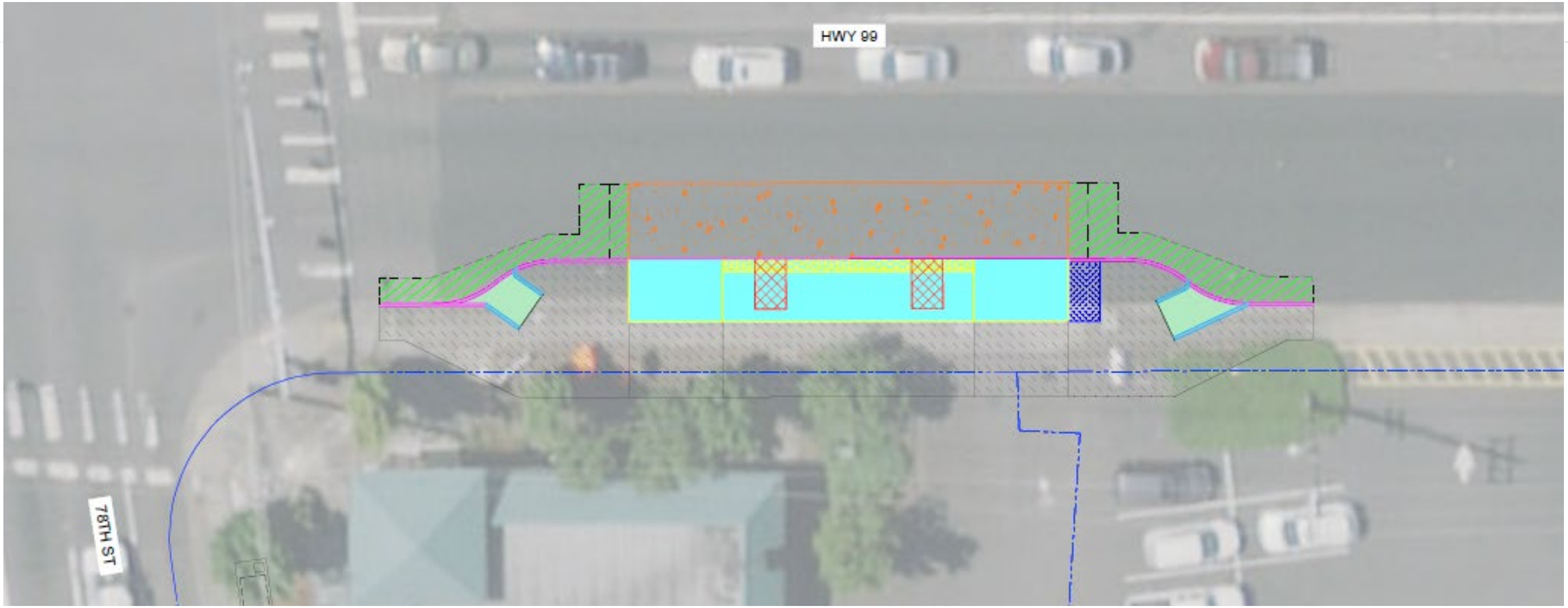

Bike Bypass Station Design

Bike Bypass, Continued

139th Street & 23rd Avenue

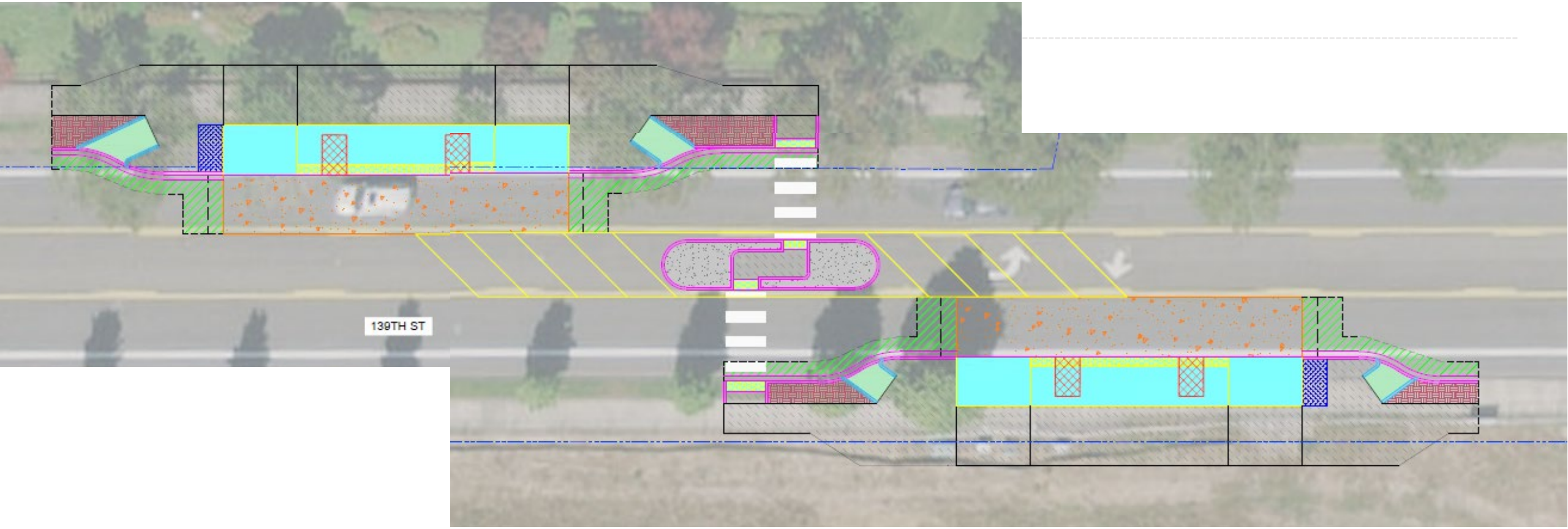

WSU Vancouver

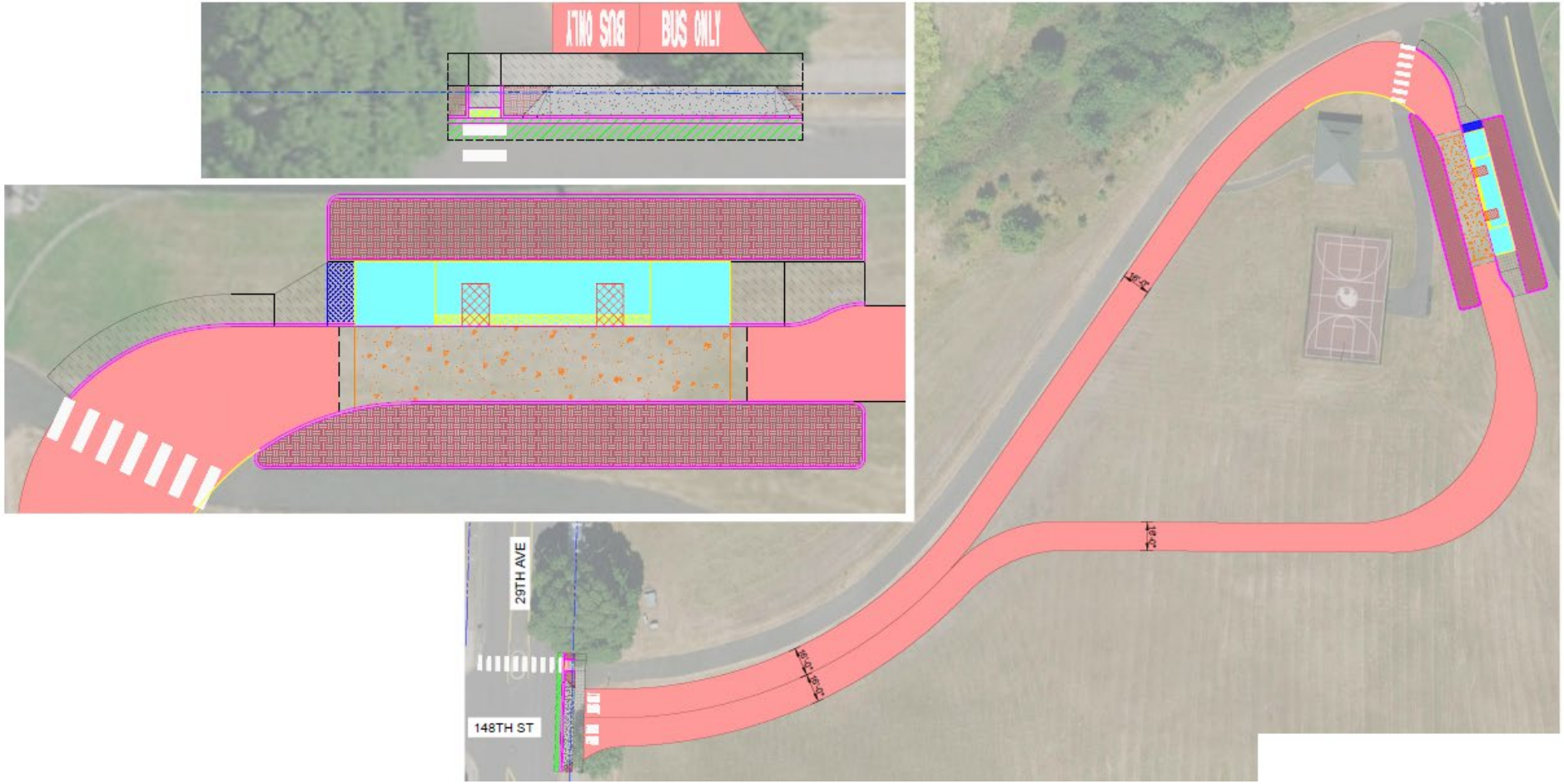

Highway 99 BRT Timeline

2022	2023	2025 – 2027
Plan	**Develop**	**Build**
• Develop design options for termini, station stops, and street operations • Conduct environmental analysis • Assess funding opportunities • Select a "Locally Preferred" design option based on analysis and public feedback • Complete 15% design • Gather public feedback • Secure project funding	WE ARE HERE • Complete design and engineering • Complete environmental process and obtain permits • Plan for construction • Gather public feedback • Secure right-of-way	• Construct Highway 99 BRT project Opening 2027 Start of Service

OUTREACH SUPPORT THROUGHOUT

THE VINE ON MILL PLAIN

Ribbon Cutting | September 30 at Mill Plain Transit Center

Grand Opening | October 1

Questions?

- Taylor Eidt, C-TRAN
  - Email: Taylor.Eidt@c-tran.org

www.catchthevine.com/highway99

MEMORANDUM

DATE: August 1, 2023

TO: Chair Ramos and Transportation and Mobility Commission members

FROM: Taylor Eidt, Planning Project Manager, C-TRAN

RE: **Highway 99 Bus Rapid Transit Project**

Introduction
The Clark County Public Transit Benefit Area Authority (C-TRAN) is proposing to implement bus rapid transit (BRT) in an approximately 10-mile corridor between downtown Vancouver and the Washington State University Vancouver (WSUV) campus primarily along Main Street in the City of Vancouver and Highway 99 through Clark County. The project includes 33 new and 4 existing stations, BRT-style branded vehicles, level boarding stations, improved station amenities, pedestrian and bicycle access to stations, off-board fare payment, enhanced safety and security at stations, and geometric transit priority treatments, and transit signal priority. The Project as proposed is expected to operate primarily in mixed traffic. Opportunities to enhance performance and reliability with transit priority include a dedicated bus entry and egress at WSUV, queue jumps at select stations, and may include treatments at other locations pending additional design refinement.

C-TRAN is pursuing the project to address several existing transportation deficiencies and future corridor opportunities. Highway 99 is C-TRAN's third-busiest corridor, a major north-south connection in Vancouver and Clark County. This corridor is a critical component for increasing transit capacity. Between 2015 and 2040, the Highway 99 corridor is forecasted to add over 7,000 new households (an increase of approximately 47%) and over 9,000 new jobs (an increase of approximately 34%). C-TRAN expects the Project will: 1) improve travel time and reliability in the corridor by reducing delay caused by traffic congestion; 2) improve mobility for residents who do not have access to a car or are experiencing poverty; and 3) enhance transit safety and access by improving lighting and security at stations and increasing the overall attractiveness of transit. The corridor includes several major employment areas and key activity centers such as downtown Vancouver, PeaceHealth Southwest Medical Center, Salmon Creek Park & Ride, Legacy Salmon Creek Medical Center, and Washington State University Vancouver.

Since a previous update to the Transportation and Mobility Commission in March 2023, the Project has made significant progress. In March 2023, the C-TRAN Board of Directors adopted a Locally Preferred Alternative design option, and the Project moved into Phase 2, Design and Engineering.

Overview/Preview
The Highway 99 BRT Project has reached the 15% design milestone, identifying draft preliminary station locations.

Action, Timeline, Next Steps
The C-TRAN project team is providing an update on progress of the Highway 99 BRT Project for the purpose of informing relevant stakeholders, gathering feedback, and identifying project design needs, constraints, and opportunities. Ultimately, the project will be a core component of the C-TRAN and City of Vancouver transportation systems, supporting mobility regionwide through this investment. C-TRAN will continue to refine design through 30%, 60%, 90%, and completion of final design in early 2025 before construction, with an anticipated opening in 2027.

Contact Information
Taylor Eidt, Planning Project Manager, C-TRAN
Taylor.Eidt@c-tran.org, 360-906-7331

Attachment(s):
TMC Presentation

.

Upper Main Street Safety and Mobility Project

Kate Drennan
Principal Transportation Planner
Community Development Department

Agenda

- What will the Project evaluate?
- Upper Main Street today
- Timeline and Next Steps

CITY OF Vancouver WASHINGTON

Purpose & Outcome

Purpose

- Introduce what the Upper Main Street Safety & Mobility Project will evaluate.
- Share some highlights of the technical analysis completed so far
- Provide an overview of upcoming project milestones.

Target Outcome

- Identify additional information needed to support upcoming decisions.

Project Study Area

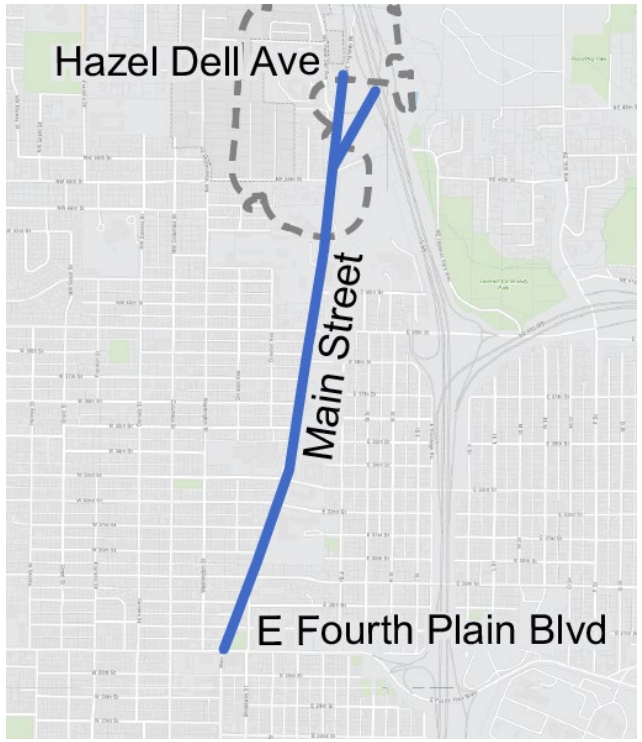

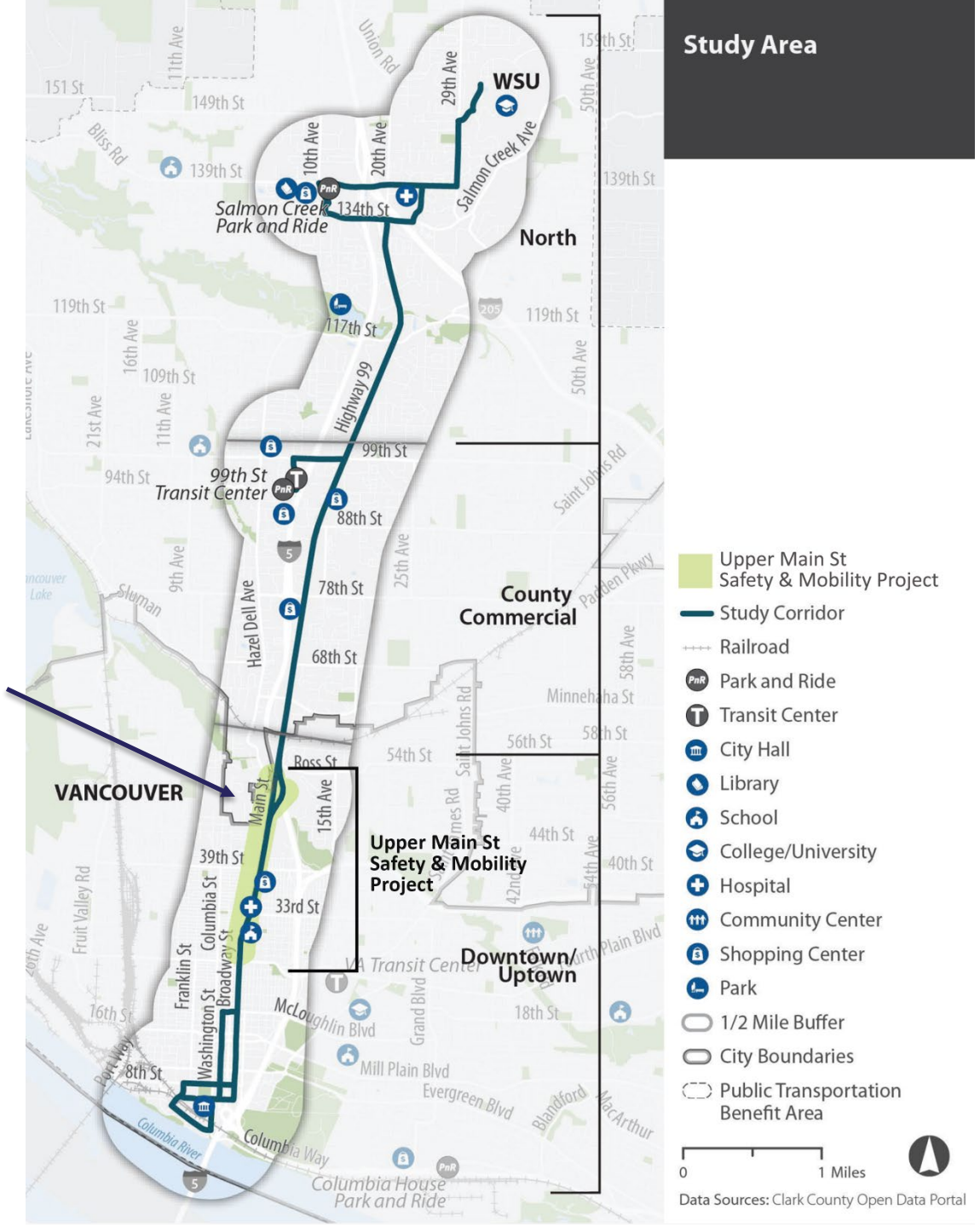

CITY OF Vancouver WASHINGTON

Project Phases

Phase 1: Analyze The Corridor

Evaluate how Main Street operates and how people use it today by conducting traffic analysis and partnering with C-TRAN in advance of the HWY 99 BRT line.

Phase 2: Develop Options

Develop design options that incorporate safety elements to address what we hear from the community and learn from the traffic analysis.

Phase 3: Design Improvements

A preferred option design will be selected based on feedback from the community and in alignment with the Evaluation Framework.

CITY OF Vancouver WASHINGTON

What is analyzed?

Driver Experience

- Delay at intersections
- Travel time between E 29th Street and Hazel Dell Avenue
- Queuing at intersections

Safety

- Historical Crash Data
- Speed

Bicycle & Pedestrian Experience

- Gaps in existing infrastructure
- Links between Burnt Bridge Creek and Discovery trails and N-S mobility facilities on F and Columbia Streets
- Comfort traveling on or parallel to the corridor
- Crossing distances and infrastructure

Other

- Transit demand and service performance along the corridor

CITY OF Vancouver WASHINGTON

Existing and Future Vehicle Traffic and Level of Service

All intersections showed acceptable levels of operations, with most areas under capacity and queue lengths at acceptable levels today.

Future traffic is unlikely to worsen thanks to operational improvements and bottleneck relief on I-5 through the Interstate Bridge Replacement (IBR) Program, and little forecasted growth directly on the corridor. However, some delay and queueing occur today at:

- Main St and Fourth Plain Boulevard: east and westbound left turning vehicles showed moderately high (LOS E) delay, and eastbound queues occasionally extend past Columbia Street during the PM peak.
- Main Street and E 39th Street, southbound left turning vehicles showed moderate to high (LOS D/E) delay, where the queue may spill back into a through lane during AM and PM peaks, resulting in vehicle congestion through the 40th Avenue traffic signal.

Pedestrian and Bicycle / Small Mobility

Sidewalks and Crossings

The street network within the project area has high sidewalk coverage. Gaps in the sidewalk network are on:

- 36th Street west of Main Street
- East side of Main Street by Kiggins Bowl.

The City will use the Pedestrian Crossing Policy in the TSP to shape the discussion around the installation and placement of new crossings.

Access to Transit

The project will look to improve access to new Hwy 99 BRT transit stations

Bike and Small Mobility

- Providing safe connections between the Burn Bridge Creek and Discovery trails to existing nearby parallel routes on Columbia Street and F street
- Ensuring that parallel routes have safe and comfortable facilities and crossings
- Exploring traffic calming, diversion prevention, wayfinding and other improvements

Upper Main Street Safety & Mobility Project Timeline

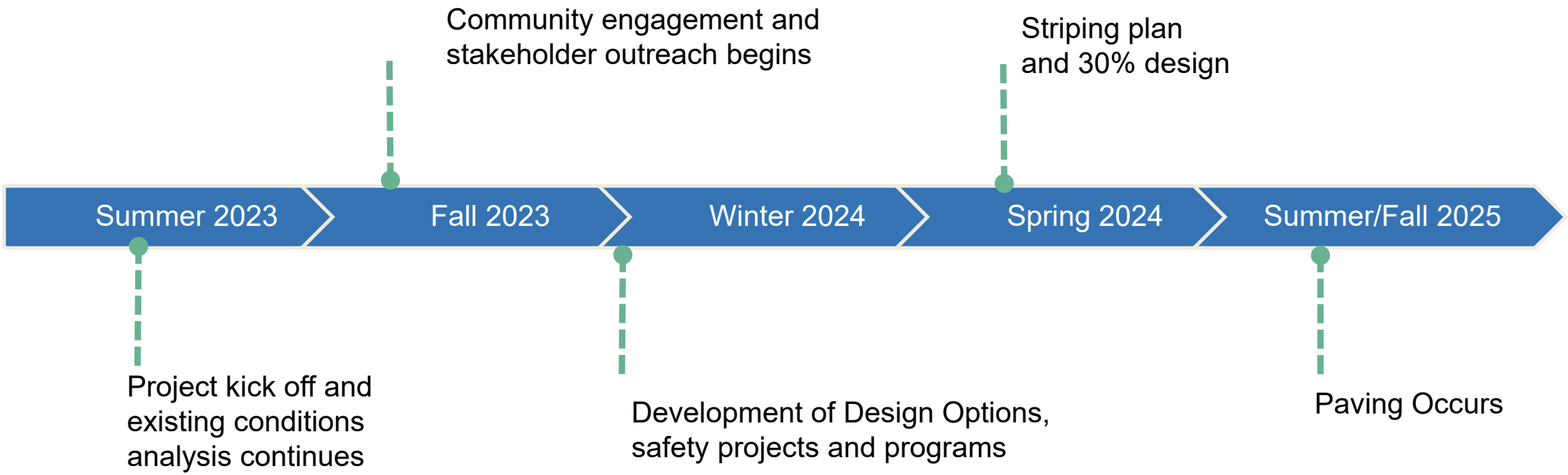

Next Steps

- Complete traffic analysis task with lane configuration alternatives
- Continue coordination with C-TRAN Hwy 99 BRT Project
- Kick-off Complete Streets planning phase
- Design public engagement and outreach plan
- Multimodal existing conditions assessment

Next Workshop: October 2nd

Thank You

CITY OF
Vancouver
WASHINGTON

MEMORANDUM

Date: August 1, 2023
To: Chair Ramos and Transportation and Mobility Commission members
CC: Rebecca Kennedy, Deputy Director, Community Development Department
From: Kate Drennan, Principal Transportation Planner Community Development Department
RE: Upper Main Street Complete Street Project

Introduction

The Upper Main Street Safety and Mobility Project (Project) is evaluating potential changes to improve safety and mobility for all who travel on Main Street between Fourth Plain Boulevard and Hazel Dell Avenue. The Project will evaluate how Main Street can better meet the needs of people using transit, walking, biking, using a mobility device, and driving. This project is being completed in coordination with planned repaving in 2025, and the ongoing C-TRAN Highway 99 Bus Rapid Transit Project. The future Bus Rapid Transit (BRT) line will operate along this section of Main Street, connecting the length of Highway 99 from downtown Vancouver to Washington State University Vancouver and the Salmon Creek Park and Ride. Upper Main Street from Fourth Plain Boulevard to the Vancouver city limit has emerged as a focus of subarea planning through the Comprehensive Plan and a civic spine in the Westside Mobility Study.

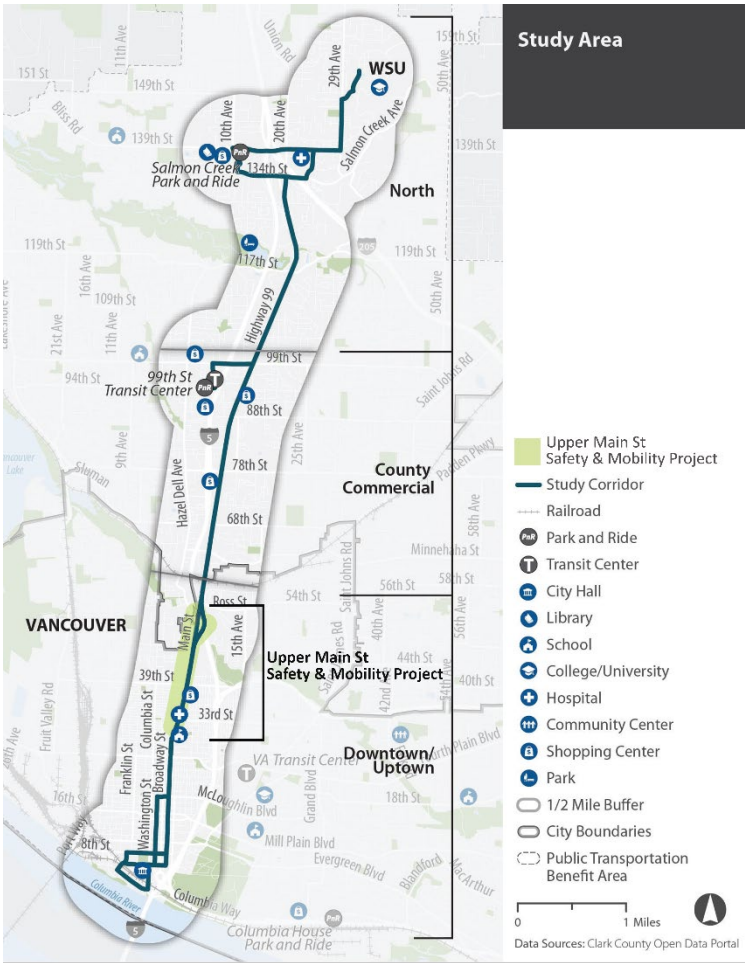

This Project will advance the City's priorities of safety, equity, and climate by:

- Identifying changes that will increase safety and comfort for all users regardless of age, ability, or mode choice.
- Increase access and opportunity for all users to travel safely throughout the transportation network.
- Increase options for low- or no-emissions travel, helping to reduce transportation related emissions.

Overview

The Upper Main Street Safety and Mobility Project area is part of the approximately nine-mile Main Street / Highway 99 BRT corridor. The transit corridor runs from downtown Vancouver at the southern extent to Salmon Creek at the northern extent. The BRT study area is a half-mile buffer (or 10-minute walk) from the corridor. This is the typical distance people will walk to high-quality transit. The Vancouver-led Upper Main Street Project will focus

specifically on the section of Main Street between Fourth Plain Blvd and Hazel Dell Avenue (Figure 1) where repaving is slated to occur.

Project Phase 1: Traffic Analysis

For maximum coordination with C-TRAN, the City contracted with the same traffic consultants working on the Hwy 99 BRT project to conduct a more refined traffic analysis on the Upper Main Street project area. The team looked at existing conditions for vehicle traffic in the project area, including AM and PM peak period traffic models. This analysis provides a baseline condition to assess intersection performance, congestion, and diversion stemming from backups on I-5. Pedestrian counts were also collected at crossing locations. Traffic was also modeled for years 2027 (opening year for the HWY 99 BRT line) and 2040 under the existing roadway configuration.

Figure 2 Upper Main Street Traffic Analysis Study Area

The existing conditions analysis found that intersections throughout most of the study area are operating well without congestion or spillback from turning lanes today and will continue to do so in the future. There are two exceptions: Fourth Plain Blvd., where east- and west-bound left turning vehicles show moderate delay at the intersection with Main Street; and at Main Street and E 39th Street, where southbound left-turning vehicles experience delay that sometimes spills back in to the southbound inside through lane.

The next step in traffic analysis is to run the future traffic model under different lane configurations. This analysis will determine if and where lane repurposing could support safety and access to transit and active transportation along the Project area.

Project Phase 2: Complete Streets Planning and Design

In addition to the traffic analysis being done in coordination with the C-TRAN team, the City has contracted with a consultant team to look at improvements to pedestrian facilities, address gaps in the small mobility network, identify areas where traffic calming and other safety measures are needed to increase frequency, safety, and comfort of multimodal connections to transit and other facilities in the Project Area. This team will build on the findings from the traffic analysis work, and conduct analysis on multimodal conditions today. This will include:

- Collecting volumes of pedestrians, bicycle and other small mobility users at intersections
- Collecting transit ridership data from C-TRAN at each bus stop within project geography including alighting and delay time

- Documenting level of traffic stress for pedestrian and bicycle/small mobility facilities along corridor; and
- Collecting and analyzing last five years of available crash data from the City for trends and crash factors.

The project will also include stakeholder outreach and public engagement, coordination with C-TRAN on station planning, corridor design and project alternatives, and a 30% striping and design plan. The Project Team will ultimately develop alternatives for different segments on the Main Street Corridor, with a particular focus on creating safe north-south connections for bicycle and small mobility users and addressing network gaps between identified modal network facilities on F street and Columbia Street and the Discovery and Burnt Bridge Creek Trails north of NE 45th Street. The project will also focus on improvements that increase safe access to existing and new transit stations and other existing mobility facilities and could also include recommendations related to limiting vehicle diversion into residential areas.

Next Steps

The TMC will receive more information about this project in workshops throughout Fall 2023 as the Complete Streets project kicks off in August.

Staff Contact Info

Kate Drennan, Principal Transportation Planner, Community Development Department
Kate.Drennan@cityofvancouer.us, (360)487-7959

Attachment(s):

Existing Conditions Calibration and Results 2022 – DKS for City of Vancouver

EXISTING CONDITIONS AND CALIBRATION MEMORANDUM

DATE: May 2, 2023

TO: Kate Drennan | City of Vancouver

FROM: Randy Johnson, PE, PTOE; Brian Kellogg, PE, PTP, PTOE; Amanda Deering, PE | DKS Associates

SUBJECT: Vancouver Upper Main St Corridor Study – Existing Conditions and Calibration

Project # 21110-004

INTRODUCTION

This memorandum documents the development, calibration and results of the existing year 2022 weekday AM and PM peak period Vissim microsimulation models for the Upper Main Street Corridor Project. Development of the Vissim models followed the WSDOT Vissim Protocol guidelines[1]. Performance measures from the model are summarized at the end of this memo. A previous submission of the Methods and Assumptions[2] memorandum documented the details of model development that were assumed going into this task.

PROJECT DESCRIPTION

This project is evaluating lane conversion potential for purposes of bicycle facilities or transit priority lanes along Main Street between 29th Avenue and Hazel Dell Avenue. This project is being completed in coordination with the C-TRAN Highway 99 Bus Rapid Transit Project, which will operate along this section of Main Street.

This memorandum focuses on existing conditions, providing a baseline for future analyses. Future no-build and build analyses will be presented in a separate memorandum.

[1] *Protocol for Vissim Simulation*. Washington State Department of Transportation (WSDOT). September 2014.

[2] *Upper Main Street Evaluation – Vissim Modeling Methods and Assumptions*. DKS Associates. March 2023.

MODEL AREA AND STUDY INTERSECTIONS

The Vissim model study area is shown in Figure 1, including the intersections evaluated for traffic operations and the intersections which had turning movement counts collected as part of this work. The model area was coded to include the Main Street and Broadway Street corridors between Fourth Plain Boulevard and I-5.

FIGURE 1: VISSIM STUDY AREA NETWORK

DATA COLLECTION SUMMARY

DKS collected the following data to help build and calibrate the existing year Vissim and Visum models:

- **Roadway geometry data**: this included roadway segment lengths, number of lanes, lengths of storage bays and tapers, intersection geometry, and pedestrian crossing locations and widths. This data was primarily obtained from aerial imagery and Google Street View.
- **Traffic control data**: this included posted speeds, stop bar and stop sign locations, traffic signal locations, traffic signal timing data, and detector plans. This data was obtained from aerial imagery and Google Street View. The City of Vancouver and WSDOT provided signal timing sheets.
- **Traffic count data**: turning movement counts were collected on Thursday, Nov. 17, 2022 for most intersections in the study area network. The exceptions include the intersection of Main Street and 45th Street, where counts were collected on Wednesday, Nov. 30, 2022, and at the Broadway Street intersections with E 28th Street and with E 27th Street, where counts were not collected as they are low volume intersection that were estimated from adjacent count locations. The traffic counts are provided in **Appendix 1** and included motor vehicle, pedestrian, bicycle, and heavy vehicle data. These counts, alongside historical traffic counts in the study area, notably from June 2022 as part of the C-TRAN Hwy 99 BRT Project, were used to develop vehicle inputs, routing, and peaking profiles for the Vissim models. See the 'Traffic Demand and Routing' section of the memo for more information about the process for developing a balanced set of traffic volumes for existing conditions.
- **Travel time and speed data**: Auto travel time along the Main Street and Broadway Street was streamed over a typical weekday using Google Maps API. The travel time and speed data was collected over the AM and PM peak commuting hours and used to calibrate the existing year Vissim model.
- **Field data**: Field observations, including pictures and video were taken in June 2022 as part of the C-TRAN Hwy 99 BRT Project.
- **Transit data**: Existing transit routes and headways were coded into the Vissim model based on information from the C-TRAN website. Dwell time distributions followed a standard distribution for typical bus routes using C-TRAN data.

MODEL DEVELOPMENT SUMMARY

The Vissim model development process used the aforementioned WSDOT Vissim Protocol as a guideline. This section describes the steps completed in the existing year 2023 model development process.

NETWORK CODING

Coding of the study area Vissim network included the following roadway network objects and attributes:

- Physical roadway (links and connectors)
- Intersection geometry (links and connectors)

- Pedestrian crosswalk links
- Traffic control (speed distributions and decisions, reduced speed areas, conflict areas, priority rules, stop signs, signal heads, detectors, and signal timing)

Free flow speed (desired speed) distributions were developed using the WSDOT Vissim Protocol methods for links without measured speed data and based on posted speed limits.

TRAFFIC DEMAND AND ROUTING

The pedestrian counts were used as pedestrian inputs for crossing locations in the Vissim model.

For vehicular volumes (cars and heavy vehicles), the peak hour volumes were first balanced through the study area network. When comparing with previous counts in the study area, it was noted that AM peak southbound volumes along Main Street from Nov. 17 were significantly higher than AM peak counts from Nov. 30 or from June 2022; this was likely due to I-5 congestion driving traffic to Main St as an alternate route. To adjust volumes to have a more conservative (i.e., higher) picture of a typical day without heavy I-5 diversion, the southbound volume at Main Street and E 39th Street were brought down to a level comparable with the June 2022 volume, and balanced throughout the study area. PM peak volumes did not note any unusual deviations from other historical counts and were balanced throughout the study network without major adjustments.

With a balanced set of AM and PM peak hour volumes, Visum was used to produce an origin/destination (OD) matrix for input into the Vissim model. An Origin-Estimation Matrix Estimation tool was used to create these OD volumes respective to the balanced turning movement volumes. These vehicle routes and demand were exported from Visum to Vissim to generate vehicle inputs and routing decisions for cars and heavy vehicles through the Vissim network.

The resulting set of AM and PM peak hour volumes used in existing conditions modeling are shown in Figure 2 and Figure 3, respectively.

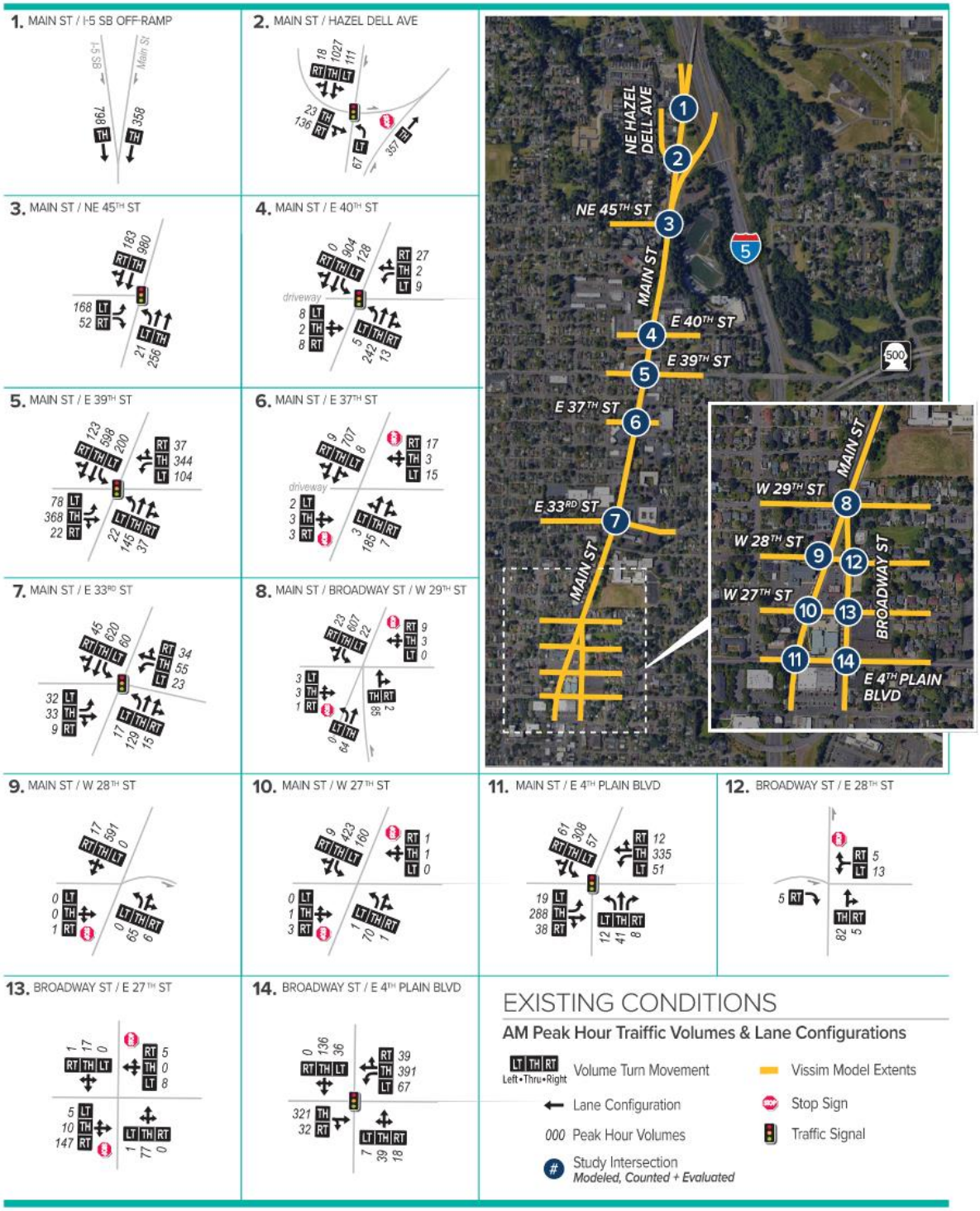

FIGURE 2: STUDY AREA TRAFFIC VOLUMES – BALANCED EXISTING CONDITIONS AM PEAK

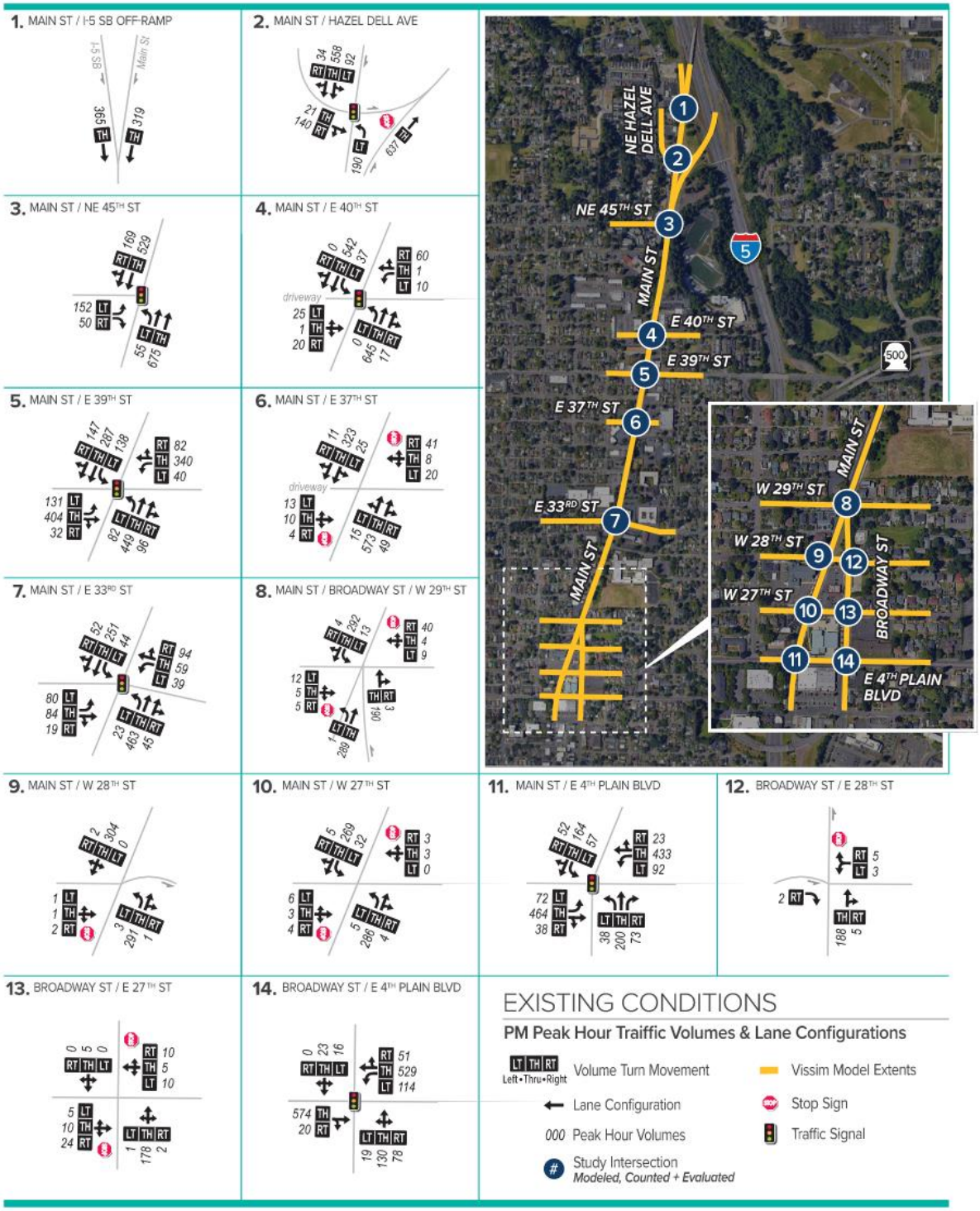

FIGURE 3: STUDY AREA TRAFFIC VOLUMES – BALANCED EXISTING CONDITIONS PM PEAK

TRAFFIC VOLUME PEAKING PROFILE

The initial AM and PM peak hour volume inputs in Vissim were modified to include a "peaking profile" with volumes in 15-minute increments. The peaking profiles were developed for multiple sections of the study area network and were based on the November 2022 count data. The AM and PM peaking profiles are shown in Figure 4 and Figure 5, respectively.

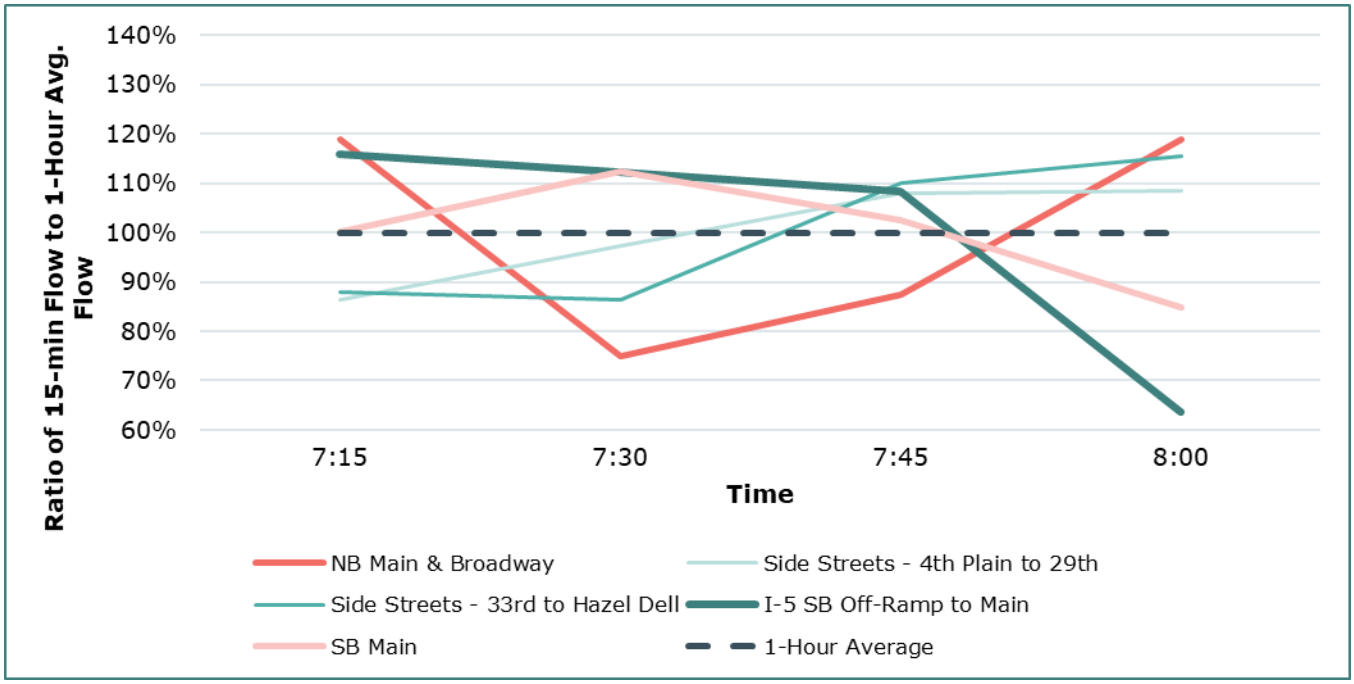

FIGURE 4: STUDY AREA PEAKING PROFILE – AM PEAK HOUR

FIGURE 5: STUDY AREA PEAKING PROFILE – PM PEAK HOUR

VEHICLE SPEED PROFILES

Posted speed limits were used to develop speed profiles for the roadways in the Vissim model.

VEHICLE COMPOSITIONS

The volume inputs also included heavy vehicle percentages based on the November 2022 count data. A separate set of OD routes were created for heavy vehicles in order to avoid placing trucks on low-volume residential streets or on movements where trucks are prohibited (e.g., the northbound left turn at Main Street and 39th Street). The North American fleet default from Vissim was used for this modeling, as is consistent with the WSDOT Vissim Protocol.

SIMULATION PERIOD AND SEEDING PERIOD

The FHWA's Traffic Analysis Toolbox[3] recommends a seeding period equal to or greater than twice the estimated travel time at free-flow conditions to traverse the entire network. Based on the size of the network and to allow for congestion levels and queues to develop to peak conditions, a seeding period of 15 minutes was chosen.

The Vissim simulation periods include a 15-minute seeding period (initialization period) followed by a one-hour simulation period.

SYSTEM PEAK HOUR

Measures of effectiveness will be reported for the one-hour system peak period in the model, for both the AM and PM peak periods. For this model, the AM peak hour is from 7:15 AM to 8:15 AM; the PM peak hour is from 4:00 PM to 5:00 PM.

ERROR CHECKING

The error checking portion of the model development focused on fixing coding errors before the calibration process began. Error checking is a process that includes a review of the coded data and a review of the animation. All coded data (geometry, speeds, signal timing data, stop and yield controls, transit data, and traffic volumes) was reviewed by the model developer and quality control reviewer.

A review of the animation was conducted to determine locations where conflict areas or priority rules might be missing, where signal timing may not be operating correctly or any other locations where generally coded parameters may have been overlooked.

[3] Traffic Analysis Toolbox Volume III: Guidelines for Applying Traffic Microsimulation Modeling Software. Federal Highway Administration (FHWA). August 2003.

CALIBRATION

Upon the completion of the error checking, DKS calibrated the simulation model following the "Traffic Throughput and Queuing Calibration Criteria" in the WSDOT Simulation Protocol. The model validation was based on 11 simulation runs to account for variation, based on guidance in the WSDOT Vissim Protocol.

The following calibration targets were used for the existing year Vissim model:

- A quantitative comparison between real-world data and model output results for traffic volumes.
- A qualitative comparison (visual inspection) of queuing and general operations along the entire study area based on comparison of collected data and field observation. See the congestion plots in **Appendix 5**.
- Vehicle travel time along multiple corridors in some models.

The initial calibration target set was for traffic volume throughput compared to input. Per the WSDOT Vissim Protocol guidelines, individual turn movements at all intersections within the calibration area were calibrated within an acceptable GEH Statistic[4]. The GEH statistic was calculated for all study intersections for the two-hour model period. The traffic volume calibration results are documented in **Appendix 2**.

The travel time segments used in calibration were as follows:

- **Broadway Street / Main Street Northbound**: from Broadway Street, starting south of Fourth Plain Boulevard, continuing north to Main Street through the intersection with NE Hazel Dell Avenue
- **Main Street Southbound**: from Main Street, upstream of the I-5 southbound off-ramp, through Fourth Plain Boulevard

To best replicate field conditions, the Vissim model calibration process implemented a variety of standard techniques were appropriate, including:

- Lane change distance on turning movement connectors to capture upstream lane utilization and vehicle positioning.
- Intersection "keep clear" zones through congested intersections.

CALIBRATION SUMMARY

The GEH statistic check at all count locations indicates that the initial calibration target of traffic volumes was met per WSDOT Vissim Protocol guidelines. All movements meet the criteria of GEH < 5 and most movements have a GEH < 1. See **Appendix 2** for full results.

The vehicle travel time outputs from Vissim models were compared to travel time data from Google typical traffic. Vehicle travel times are within the travel time confidence interval target from the

[4] The GEH statistic is a formula used to compare two sets of traffic volumes. It is a continuous volume tolerance formula that was developed to overcome the wide range and variation in volume data possible in a traffic model.

Vissim protocol and are also consistent with Google typical traffic. See Table 1 (pg. 10) for complete travel time results.

MEASURES OF EFFECTIVENESS

The following Measures of Effectiveness (MOEs) were reported from the Vissim models for the AM and PM peak hours:

- Travel time (along the Main Street and Broadway Street segments)
- Delay at study intersections
- Congestion plots for the AM and PM peak periods
- Average and 95th-percentile queue lengths at study intersection approaches
- System network delay, vehicle throughput, and unserved demand

TRAVEL TIME – MOTOR VEHICLES

Table 1 reports the travel time comparison between the Vissim model results and travel time data gathered from the Google Maps API for general-purpose motor vehicles. Both travel time segments met calibration targets for the AM and PM peaks.

TABLE 1: TRAVEL TIME RESULTS (MOTOR VEHICLES)

TRAVEL TIME SEGMENT	HOUR	TRAVEL TIME (MIN:SEC)				DIFFERENCE (SECONDS)	CONFIDENCE INTERVAL (SECONDS)	CALIBRATION STATUS
		Vissim Model			Google API			
		Avg.	Min.	Max.	Avg.			
BROADWAY ST/MAIN ST NB	7:15-8:15 AM	4:04	2:19	6:07	3:53	+11	+/- 35	Pass
	4:00-5:00 PM	4:14	2:04	6:32	4:12	+2	+/- 42	Pass
MAIN ST SB	7:15-8:15 AM	4:36	2:51	6:50	4:23	+13	+/- 41	Pass
	4:00-5:00 PM	4:51	2:56	7:09	4:45	+6	+/- 48	Pass

DELAY

Motor vehicle delay measurements were calculated over the peak hour for each model. Delay reported for a study intersection is measured back to the next intersection only. The full intersection delay summary is shown in Table 2, with delay results by movement provided in **Appendix 3**.

TABLE 2: OVERALL INTERSECTION DELAY RESULTS – EXISTING CONDITIONS

INTERSECTION	CONTROL TYPE	AM PEAK		PM PEAK	
		Delay (s)	LOS	Delay (s)	LOS
MAIN ST & NE HAZEL DELL AVE	Signal	8	A	8	A
MAIN ST & NE 45TH ST	Signal	13	B	10	B
MAIN ST & E 40TH ST	Signal	5	A	5	A
MAIN ST & E 39TH ST	Signal	25	C	34	C
MAIN ST & E 37TH ST / SAFEWAY DWY	Side-Street Stop	1	A	2	A
MAIN ST & E 33RD ST	Signal	14	B	18	B
MAIN ST / BROADWAY ST & 29TH ST	Side-Street Stop	3	A	2	A
MAIN ST & 28TH ST	Side-Street Stop	2	A	1	A
MAIN ST & 27TH ST	Side-Street Stop	5	A	1	A
MAIN ST & FOURTH PLAIN BLVD	Signal	26	C	32	C
BROADWAY ST & E FOURTH PLAIN BLVD	Signal	17	B	17	B

CONGESTION

The simulation model was also used to measure motor vehicle delay relative to desired speed as an indicator of congestion. The delay is measured as a percentage as percent of travel time for a given roadway segment. The figures in **Appendix 5** show the relative delay (queues) for each 15-minute interval during the 7-9 AM or 4-6 PM analysis period, as averaged over 11 simulations. The colors shown in these figures indicate the following approximate queue states:

- Dark Green = Free flow, no delay (delay less than 5 percent of travel time)
- Light green = Slight slowing (5-20 percentile)
- Yellow = Increased slowing, but not yet stop and go (20-40 percentile)
- Orange = Furthest extend of stop and go queues, rough approximation of 95th percentile queue (40-60 percentile)
- Red = Fluctuates between low-speed flow and stopped queue (60-80 percentile)
- Dark Red = Stop and go queue during the entire 15-minutes peak interval (delay greater than 80 percentile of travel time)

Congestion plots for the peak 15-minute period during the AM peak hour and PM peak hour simulation runs are shown in Figure 6.

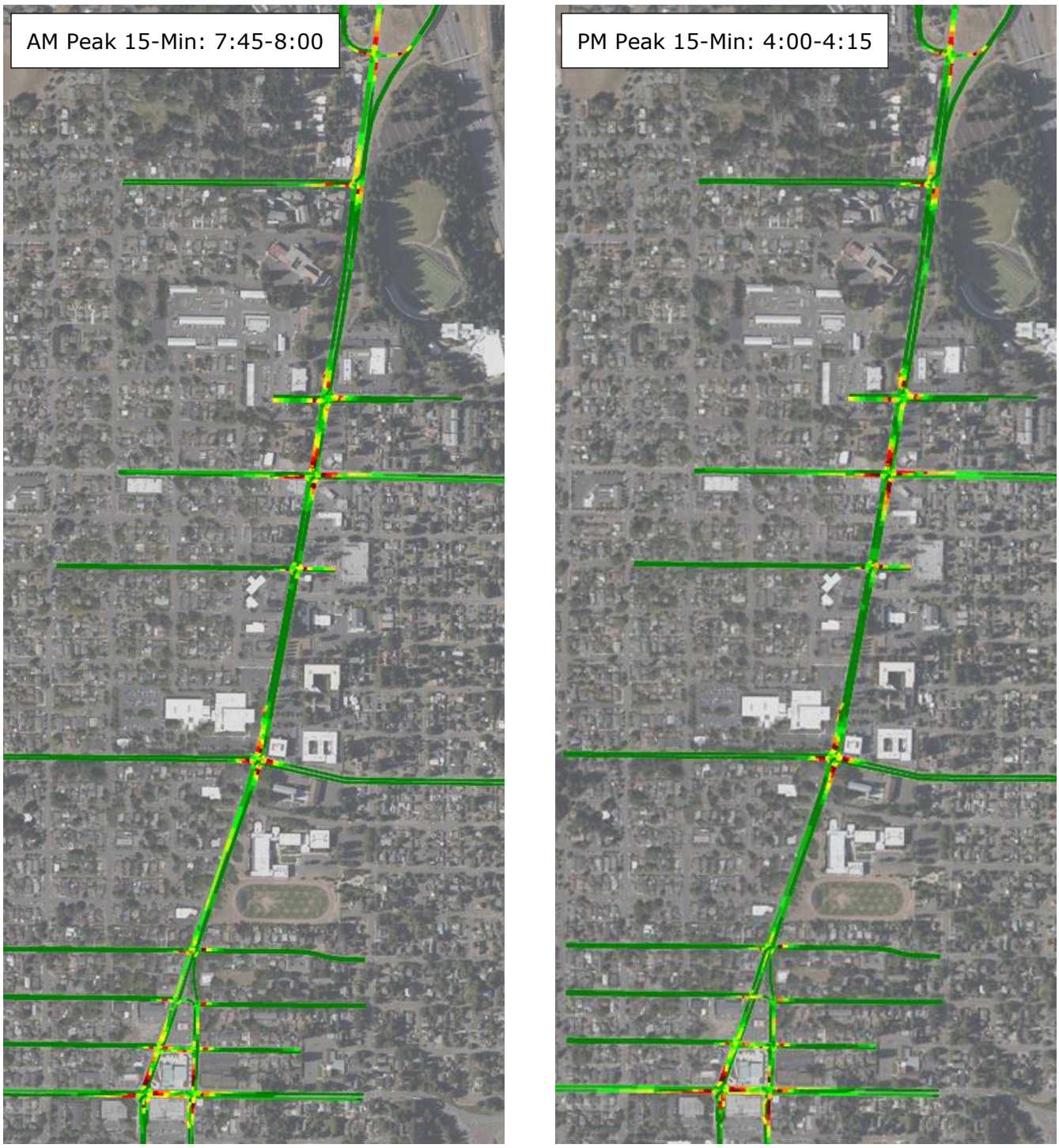

FIGURE 6: PEAK 15-MINUTE CONGESTION PLOT

QUEUE LENGTHS

Queue lengths are reported for each study intersection over the peak hour. To calculate 95th-percentile queues, the queue length data was collected from Vissim using queue counters on all approaches using 120-second intervals, or 30 queue length measurements over the entire hour.

Storage lengths (at turn bays), average queue lengths and 95th-percentile queues are reported in **Appendix 4**, with queue results at selected intersections shown in Table 3.

TABLE 3: VISSIM QUEUE LENGTH RESULTS (AT SELECTED INTERSECTIONS)

INTERSECTION	MOVEMENT	STORAGE LENGTH (FT)[A]	AM PEAK		PM PEAK	
			Average Queue (ft)	95th-%ile Queue (ft)	Average Queue (ft)	95th-%ile Queue (ft)
MAIN ST & 45TH ST	NBL	200	25	**80**	0	0
	NBT	1100	40	90	55	140
	SBT/R	640	140	325	35	80
	EBL	100	**150**	**400**	65	**125**
	EBR		20	40	30	80
MAIN ST & 39TH ST	NBL	70	25	60	**100**	**245**
	NBT/R	460	60	110	175	290
	SBL	70	**125**	**250**	**105**	**185**
	SBT/R	350	165	285	125	210
	EBL	130	55	110	110	**195**
	EBT/R		195	420	265	480
	WBL	130	90	**290**	35	85
	WBT/R		185	380	280	540
MAIN ST & 33RD ST	NBL	50	15	45	30	**105**
	NBT/R	1050	45	85	125	250
	SBL	70	50	**155**	40	**90**
	SBT/R	1050	135	250	80	145
	EBL	70	25	60	55	**110**
	EBT/R		25	60	45	105
	WBL	70	20	45	30	65
	WBT/R		40	90	60	125

[A] Storage lengths are measured to end of turn pocket or to the adjacent study intersection
Bold indicates queue exceeds storage length

SYSTEM PERFORMANCE

System performance was measured through system network delay (reported as vehicle hours of delay), system vehicle throughput (vehicles arrived) and system unserved demand (latent demand) for the one-hour simulation period. The system performance measure results are shown in Table 4.

TABLE 4: SYSTEM PERFORMANCE RESULTS

SYSTEM PERFORMANCE MEASURE	EXISTING CONDITIONS AM PEAK	EXISTING CONDITIONS PM PEAK
NETWORK DELAY (VEHICLE HOURS OF DELAY)	55	59
VEHICLE THROUGHPUT (VEHICLES ARRIVED)	3687	4939
UNSERVED DEMAND (LATENT DEMAND)	0	0

INTERSECTION CAPACITY ANALYSIS RESULTS

An intersection capacity analysis was performed using Synchro as part of the C-TRAN Highway 99 BRT study over several intersections of the Upper Main Street corridor. The capacity analysis included the following MOEs: level of service (LOS), delay, and volume-to-capacity ratios for each study intersection. Table 5 and Table 6 show the capacity analysis results from the previous study over the AM and PM peak hours, respectively. More information can be found in the existing conditions memo for the Highway 99 BRT study.

TABLE 5: HIGHWAY 99 INTERSECTION CAPACITY RESULTS – AM PEAK HOUR

INTERSECTION	CONTROL TYPE	JURISDICTION	MOBILITY TARGET	DELAY (SEC)	LOS	V/C RATIO
MAIN ST & 39TH ST	Signalized	City	LOS D	38	D	0.67
MAIN ST & 33RD ST	Signalized	City	LOS D	17	B	0.35
BROADWAY ST & FOURTH PLAIN BLVD	Signalized	City	LOS D	13	B	0.23

TABLE 6: HIGHWAY 99 INTERSECTION CAPACITY RESULTS – PM PEAK HOUR

INTERSECTION	CONTROL TYPE	JURISDICTION	MOBILITY TARGET	DELAY (SEC)	LOS	V/C RATIO
MAIN ST & HAZEL DELL AVE	Signalized	WSDOT	LOS D	2	A	0.78
MAIN ST & 45TH ST	Signalized	City	LOS D	15	B	0.43
MAIN ST & 40TH ST	Signalized	City	LOS D	4	A	0.31
MAIN ST & 39TH ST	Signalized	City	LOS D	36	D	0.71
MAIN ST & 33RD ST	Signalized	City	LOS D	21	C	0.45
MAIN ST & FOURTH PLAIN BLVD	Signalized	City	LOS D	32	C	0.59
BROADWAY ST & FOURTH PLAIN BLVD	Signalized	City	LOS D	15	B	0.69
MAIN ST & 29TH ST	TWSC	City	v/c >0.95	15	C	0.38

STREETLIGHT AND OD ANALYSIS

An analysis of travel patterns in the Upper Main Street corridor area was performed to determine key existing origin-destination patterns. This information will be used to help inform traffic analysis for the project and any analysis of diversion trends in the future. To perform the analysis of travel patterns, two sources were used: the SW RTC travel demand model for existing (2015) and future (2040) years and Streetlight Data from 2019-2022. Streetlight Data is passively collected location-based data (often sourced from cell phones, connected vehicles, etc.) that is anonymized, cleaned of data anomalies, and aggregated to be able to represent travel patterns in an area. The data was queried for several roadway segments in the Upper Main Street area to determine routing and destinations for people driving along Main Street. Additionally, similar analysis using a "select link" analysis method was performed in the travel demand models for comparison.

STREETLIGHT DATA

Key findings from the analysis are provided below. Full plots for all the data queries using Streetlight Data and model plots can be found in **Appendix 6** for reference. In general, the following trends were found:

- COVID-19 and stay at home measures did impact travel patterns and the number of travelers in the area. Travel decreased and less diversion routes were used.
- Streetlight Data from 2022 reflects a return to normalcy, reflecting similar travel patterns observed in 2019.
- Streetlight data was able to reflect more diversion routes used than in a travel demand model. This is reflective of how a travel demand model functions. Typically, trips are assigned to the

fastest route and not all route variations are used. Additionally, Streetlight data may reflect the impact of diversion events in route choice, whereas the model reflects an average condition.

When looking at specific locations, detailed routes and potential for diversion or neighborhood cut through can be identified. When looking at the Main Street I-5 off ramp in the AM peak period, most travelers are headed south of 39th Street, with about a third heading downtown. There are small, but noticeable routes that use the Main Street off-ramp as a diversion route to skip congestion on I-5. These trips are shown getting off the freeway at Main Street and then getting back on at the Fourth Plain Boulevard or Mill Plain Boulevard ramps. When looking at the PM peak period, the trips tend to disperse before reaching downtown and less diversion routes from the freeway are used, likely due to less congestion in the southbound direction at this time. Figure 7 below shows what the query results look like in the Streetlight Data platform.

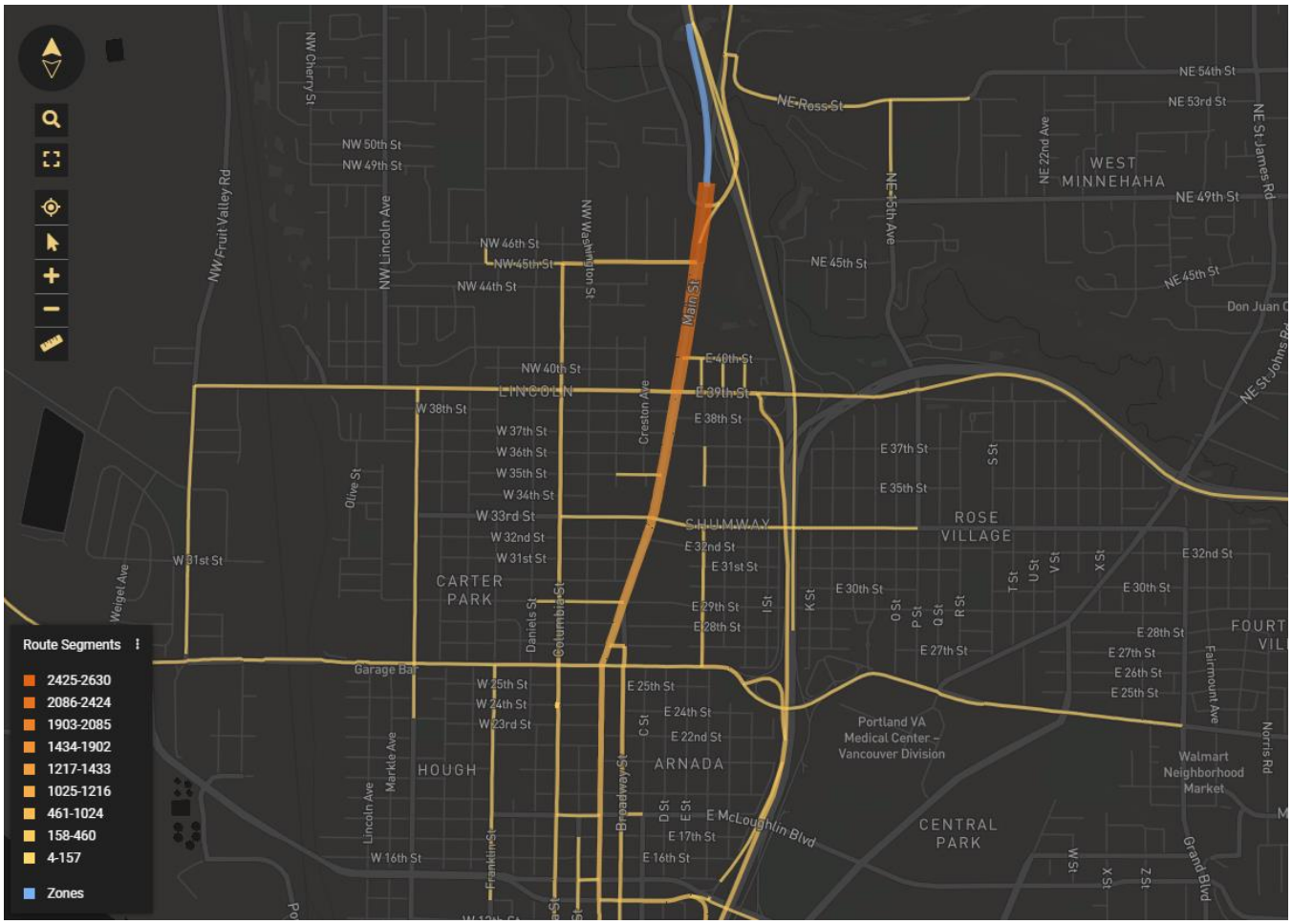

FIGURE 7: MAIN STREET OFF-RAMP TRAVEL PATTERNS (2019 AM PEAK PERIOD)

When looking at travel patterns north of I-5 on Highway 99, travelers were headed for an I-5 on ramp or access to SR 500 or Fourth Plain Boulevard. There was less demand for access to downtown via Highway 99, as these trips likely used I-5 for quicker access.

In addition, several roadway segments around the Main Street/39th Street intersection were selected to analyze trip patterns. Generally, travel destinations for people traveling through the

intersection included industrial areas to the west, accessed via 39th Street or Fourth Plain Boulevard, Sr 500 heading east, and various businesses along Main Street north of downtown. East-west along 39th Street appears to be a key connection for travelers on SR 500 to access the industrial area to the west and vice versa.

Regarding potential diversion routes, segments along Columbia Street and Fourth Plain Boulevard were analyzed. The results on Columbia Street tend to show lower volumes than on the parallel Main Street facility, and most trips stay on Columbia into the downtown area. Similarly, travelers on Fourth Plain Boulevard stay on Fourth Plain Boulevard to access the industrial area to the west, with a few trips headed downtown. These trends are similar in both the AM and PM peak periods, however the direction of trips tends to be reversed, with people heading to work in the AM and home in the PM.

MODEL COMPARISONS

When looking at additional information the travel demand models can provide regarding trip making behavior, the comparison of model years can be the most instructive. As mentioned previously, travel demand models reflect a limited selection of existing year travel patterns. So, Streetlight Data was used to expound upon existing travel trends, while the model comparisons shed some light on future trends.

When comparing the 2015 existing and 2040 future year model volumes for both the AM and PM peak periods, key findings are as follows:

- There are major increases in roadway capacity along I-5, due to the assumption of a new interstate bridge and the improvements that would come with that project, north of the river.
- A very small growth in volume is shown along Main Street, likely due to the increase capacity on the highway, which decreases the need for early diversion off the highway.
- In the greater downtown area, most growth is shown in the port and industrial area to the west, as well as the south waterfront area.

The following table shows the average number of new trips and percent growth for the study area which includes Main Street from I-5 to downtown and the surrounding area west of I-5. These percent growths indicate that the area is relatively built out and will not see concentrated growth in the future.

TABLE 7: 2040-2015 TRIP GROWTH IN UPPER MAIN STREET AREA

TRIPS	AM PEAK HOUR	PM PEAK HOUR
Average New Trips	172	140
Average Percent Growth	26%	19%
Average Percent Growth Per Year	1.0%	0.8%

Based on model plot comparisons, the combination of less growth in built out areas and increased capacity on I-5 would result in less potential for major diversion occurring on a regular basis. There

are no huge changes in travel patterns forecasted in the future in the Upper Main Street study area, compared to existing conditions.

KEY FINDINGS AND NEXT STEPS

Throughout the study area network, all intersections showed generally favorable operations, with no areas over capacity and queue lengths not showing long spillbacks. The exceptions to this occurred at the following places:

- Fourth Plain Boulevard, where east- and westbound left turning vehicles showed moderately high (LOS E) delay at the intersection with Main Street, and eastbound queues occasionally extended past Columbia Street during the PM peak
- Main Street and E 39th Street, which saw moderate to high (LOS D/E) delay for the southbound left turn, where the queue at times would spill back into the inside southbound through lane during both the AM and PM peak periods. This condition was observed in the field and is present in the model, resulting in congestion through the 40th Avenue traffic signal.

These results were meant to reflect an average weekday peak period, and did not include results for high traffic diversion from I-5 onto Main Street. Such diversion scenarios would likely create an over-capacity condition along Main Street as congestion between that corridor and I-5 are balanced. Evaluating lane conversion scenarios will also be done in context of future traffic volumes to reflect typical operations during the future-year scenarios.

Following this existing conditions analysis, traffic forecasts will be developed for year 2027 (C-TRAN Hwy 99 BRT opening year) and year 2040 (RTC Regional Transportation Plan horizon) analyses. For those future years, no-build scenarios as well as build option scenarios will be made for the AM and PM peaks. This analysis will determine if and where lane conversions can occur to better support transit and active transportation along the Upper Main Street Corridor.

APPENDIX

CONTENTS

1. TRAFFIC COUNTS
2. VISSIM MODEL GEH STATISTIC
3. VISSIM MODEL DELAY
4. VISSIM MODEL QUEUE LENGTHS
5. VISSIM MODEL CONGESTION PLOTS
6. STREETLIGHT DATA PLOTS

1. TRAFFIC COUNTS

ALL TRAFFIC DATA SERVICES
(303) 216-2439
www.alltrafficdata.net

Location: 1 BROADWAY ST & 4TH PLAIN BLVD AM
Date: Thursday, November 17, 2022
Peak Hour: 07:20 AM - 08:20 AM
Peak 15-Minutes: 07:50 AM - 08:05 AM

Peak Hour

Motorized Vehicles

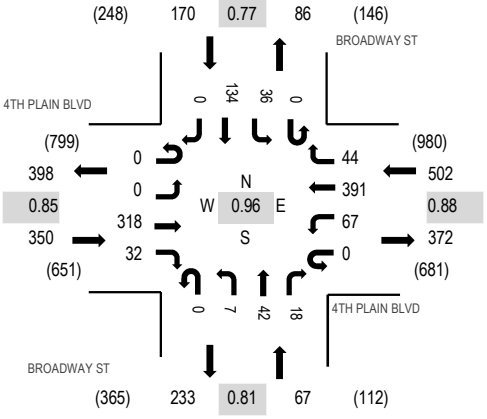

Heavy Vehicles

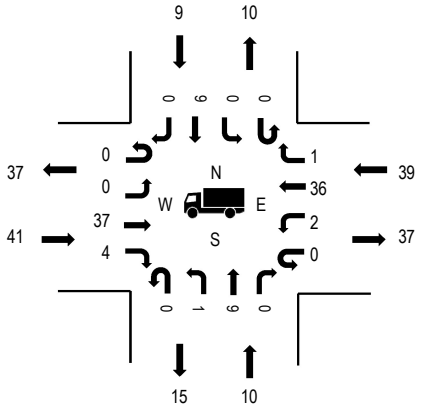

Pedestrians

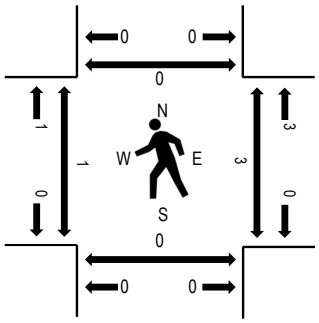

Note: Total study counts contained in parentheses.

	HV%	PHF
EB	11.7%	0.85
WB	7.8%	0.88
NB	14.9%	0.81
SB	5.3%	0.77
All	9.1%	0.96

Traffic Counts - Motorized Vehicles

Interval Start Time	4TH PLAIN BLVD Eastbound				4TH PLAIN BLVD Westbound				BROADWAY ST Northbound				BROADWAY ST Southbound					Rolling Hour
	U-Turn	Left	Thru	Right	U-Turn	Left	Thru	Right	U-Turn	Left	Thru	Right	U-Turn	Left	Thru	Right	Total	
6:30 AM	0	0	17	0	0	5	37	0	0	0	2	1	0	0	1	0	63	899
6:35 AM	0	0	15	1	0	1	44	2	0	0	0	1	0	0	2	0	66	931
6:40 AM	0	0	17	0	0	3	37	4	0	0	1	0	0	1	1	0	64	937
6:45 AM	0	0	18	1	0	0	42	0	0	0	2	0	0	2	2	0	67	970
6:50 AM	0	0	24	3	0	4	38	0	0	1	3	0	0	1	2	0	76	991
6:55 AM	0	0	23	1	0	3	29	1	0	0	3	2	0	2	3	0	67	1,008
7:00 AM	0	0	22	3	0	4	29	2	0	0	1	2	0	3	4	0	70	1,036
7:05 AM	0	0	26	5	0	6	28	5	0	1	3	0	0	5	7	0	86	1,061
7:10 AM	0	0	35	3	0	4	20	2	0	0	4	0	0	2	9	0	79	1,067
7:15 AM	0	0	25	3	0	3	25	4	0	0	3	2	0	1	16	0	82	1,075
7:20 AM	0	0	30	8	0	3	28	1	0	1	4	2	0	4	19	0	100	1,089
7:25 AM	0	0	18	2	0	4	29	4	0	0	4	1	0	4	13	0	79	1,089
7:30 AM	0	0	35	0	0	3	24	4	0	2	5	1	0	3	18	0	95	
7:35 AM	0	0	24	5	0	3	22	2	0	0	4	1	0	2	9	0	72	
7:40 AM	0	0	31	0	0	6	36	3	0	0	1	1	0	2	17	0	97	
7:45 AM	0	0	23	2	0	6	37	1	0	0	6	1	0	2	10	0	88	
7:50 AM	0	0	29	1	0	5	28	6	0	2	2	2	0	9	9	0	93	
7:55 AM	0	0	18	5	0	8	41	9	0	0	2	0	0	2	10	0	95	
8:00 AM	0	0	20	3	0	6	44	1	0	1	5	3	0	3	9	0	95	
8:05 AM	0	0	27	3	0	5	33	4	0	0	3	1	0	2	14	0	92	
8:10 AM	0	0	31	2	0	10	33	2	0	0	1	3	0	1	4	0	87	
8:15 AM	0	0	32	1	0	8	36	7	0	1	5	2	0	2	2	0	96	
8:20 AM	0	0	30	3	0	6	42	5	0	0	3	3	0	1	7	0	100	
8:25 AM	0	0	23	3	0	9	28	6	0	0	4	3	0	2	4	0	82	
Count Total	0	0	593	58	0	115	790	75	0	9	71	32	0	56	192	0	1,991	
Peak Hour	0	0	318	32	0	67	391	44	0	7	42	18	0	36	134	0	1,089	

Traffic Counts - Heavy Vehicles, Bicycles on Road, and Pedestrians/Bicycles on Crosswalk

Interval Start Time	Heavy Vehicles					Interval Start Time	Bicycles on Roadway					Interval Start Time	Pedestrians/Bicycles on Crosswalk				
	EB	NB	WB	SB	Total		EB	NB	WB	SB	Total		EB	NB	WB	SB	Total
6:30 AM	0	0	4	0	4	6:30 AM	0	0	0	0	0	6:30 AM	0	0	0	0	0
6:35 AM	2	0	1	1	4	6:35 AM	0	0	0	0	0	6:35 AM	0	0	0	0	0
6:40 AM	5	0	3	1	9	6:40 AM	0	0	0	0	0	6:40 AM	0	0	0	0	0
6:45 AM	3	2	6	0	11	6:45 AM	0	0	0	0	0	6:45 AM	0	0	0	0	0
6:50 AM	5	1	2	0	8	6:50 AM	0	0	0	0	0	6:50 AM	0	0	0	0	0
6:55 AM	3	0	5	0	8	6:55 AM	0	0	0	0	0	6:55 AM	0	1	1	0	2
7:00 AM	2	0	6	0	8	7:00 AM	0	0	0	0	0	7:00 AM	0	0	0	0	0
7:05 AM	3	0	6	1	10	7:05 AM	0	0	0	0	0	7:05 AM	0	0	0	0	0
7:10 AM	3	0	1	1	5	7:10 AM	0	0	0	0	0	7:10 AM	0	1	0	0	1
7:15 AM	4	1	6	0	11	7:15 AM	0	0	0	0	0	7:15 AM	0	0	0	0	0
7:20 AM	5	2	1	1	9	7:20 AM	0	0	0	0	0	7:20 AM	0	0	0	0	0
7:25 AM	3	0	1	0	4	7:25 AM	0	0	0	0	0	7:25 AM	0	0	0	0	0
7:30 AM	4	0	4	0	8	7:30 AM	0	0	0	0	0	7:30 AM	0	0	0	0	0
7:35 AM	1	1	3	1	6	7:35 AM	0	0	0	0	0	7:35 AM	0	0	1	0	1
7:40 AM	3	0	2	3	8	7:40 AM	0	0	0	0	0	7:40 AM	0	0	0	0	0
7:45 AM	5	0	4	0	9	7:45 AM	0	0	0	0	0	7:45 AM	0	0	0	0	0
7:50 AM	2	1	0	1	4	7:50 AM	0	0	0	0	0	7:50 AM	0	0	0	0	0
7:55 AM	3	1	1	0	5	7:55 AM	0	0	0	0	0	7:55 AM	0	0	2	0	2
8:00 AM	1	2	7	1	11	8:00 AM	0	0	0	0	0	8:00 AM	0	0	0	0	0
8:05 AM	4	1	6	0	11	8:05 AM	0	0	0	0	0	8:05 AM	0	0	0	0	0
8:10 AM	3	0	6	2	11	8:10 AM	0	0	0	0	0	8:10 AM	0	0	0	0	0
8:15 AM	7	2	4	0	13	8:15 AM	0	0	0	0	0	8:15 AM	1	0	0	0	1
8:20 AM	6	0	5	1	12	8:20 AM	0	0	0	0	0	8:20 AM	1	0	0	0	1
8:25 AM	4	1	3	0	8	8:25 AM	0	0	0	0	0	8:25 AM	0	0	0	0	0
Count Total	81	15	87	14	197	Count Total	0	0	0	0	0	Count Total	2	2	4	0	8
Peak Hour	41	10	39	9	99	Peak Hour	0	0	0	0	0	Peak Hour	1	0	3	0	4

ALL TRAFFIC DATA SERVICES
(303) 216-2439
www.alltrafficdata.net

Location: 2 MAIN ST & 4TH PLAIN BLVD AM
Date: Thursday, November 17, 2022
Peak Hour: 07:05 AM - 08:05 AM
Peak 15-Minutes: 07:10 AM - 07:25 AM

Peak Hour

Motorized Vehicles

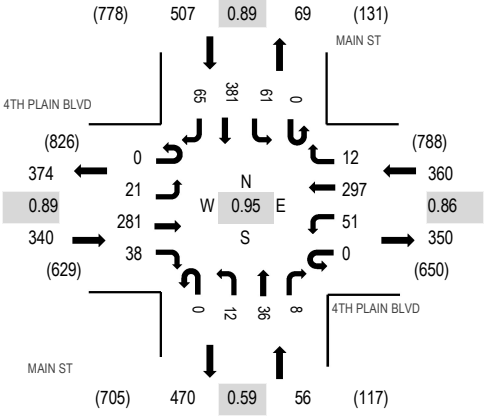

Heavy Vehicles

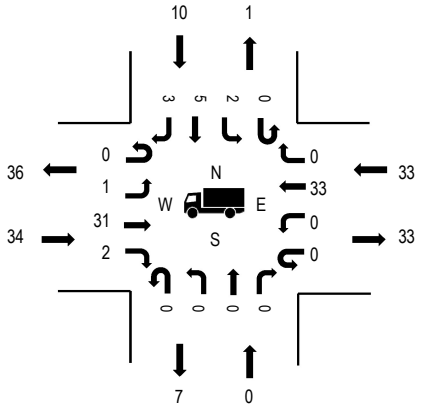

Pedestrians

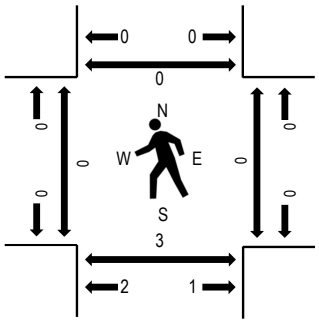

Note: Total study counts contained in parentheses.

	HV%	PHF
EB	10.0%	0.89
WB	9.2%	0.86
NB	0.0%	0.59
SB	2.0%	0.89
All	6.1%	0.95

Traffic Counts - Motorized Vehicles

Interval Start Time	4TH PLAIN BLVD Eastbound				4TH PLAIN BLVD Westbound				MAIN ST Northbound				MAIN ST Southbound				Total	Rolling Hour
	U-Turn	Left	Thru	Right	U-Turn	Left	Thru	Right	U-Turn	Left	Thru	Right	U-Turn	Left	Thru	Right		
6:30 AM	0	0	17	0	0	0	37	2	0	0	3	0	0	2	7	6	74	1,073
6:35 AM	0	0	13	1	0	3	37	0	0	0	2	1	0	0	7	2	66	1,100
6:40 AM	0	2	14	0	0	0	41	0	0	0	1	0	0	1	2	4	65	1,131
6:45 AM	0	1	22	1	0	2	37	0	0	0	1	0	0	1	8	9	82	1,183
6:50 AM	0	1	21	0	0	1	38	0	0	2	0	0	0	3	10	8	84	1,199
6:55 AM	0	1	22	3	0	4	28	1	0	0	0	0	0	2	17	5	83	1,221
7:00 AM	0	0	18	1	0	0	26	0	0	0	0	1	0	5	24	5	80	1,248
7:05 AM	0	2	19	2	0	6	22	0	0	0	3	0	0	8	37	7	106	1,263
7:10 AM	0	2	31	7	0	2	14	1	0	1	5	1	0	10	41	2	117	1,260
7:15 AM	0	2	23	1	0	3	27	1	0	5	3	0	0	4	32	2	103	1,255
7:20 AM	0	2	23	4	0	5	21	1	0	1	7	1	0	12	31	6	114	1,255
7:25 AM	0	0	21	2	0	2	28	1	0	2	2	0	0	4	31	6	99	1,241
7:30 AM	0	2	26	4	0	1	19	1	0	0	0	2	0	3	31	12	101	
7:35 AM	0	3	25	3	0	3	20	1	0	1	1	1	0	4	29	6	97	
7:40 AM	0	3	27	2	0	2	36	0	0	0	4	0	0	4	32	7	117	
7:45 AM	0	3	23	5	0	5	22	0	0	0	3	0	0	3	29	5	98	
7:50 AM	0	1	23	1	0	6	31	1	0	0	0	3	0	4	30	6	106	
7:55 AM	0	0	20	3	0	9	30	2	0	2	5	0	0	2	34	3	110	
8:00 AM	0	1	20	4	0	7	27	3	0	0	3	0	0	3	24	3	95	
8:05 AM	0	0	22	2	0	8	25	0	0	0	9	0	0	5	25	7	103	
8:10 AM	0	1	32	1	0	8	25	1	0	1	4	4	0	1	25	9	112	
8:15 AM	0	2	30	1	0	7	29	0	0	1	9	1	0	4	15	4	103	
8:20 AM	0	1	29	1	0	7	30	0	0	2	3	3	0	1	20	3	100	
8:25 AM	0	4	22	3	0	4	26	1	0	0	12	1	0	2	17	5	97	
Count Total	0	34	543	52	0	95	676	17	0	18	80	19	0	88	558	132	2,312	
Peak Hour	0	21	281	38	0	51	297	12	0	12	36	8	0	61	381	65	1,263	

Traffic Counts - Heavy Vehicles, Bicycles on Road, and Pedestrians/Bicycles on Crosswalk

Interval Start Time	Heavy Vehicles					Interval Start Time	Bicycles on Roadway					Interval Start Time	Pedestrians/Bicycles on Crosswalk				
	EB	NB	WB	SB	Total		EB	NB	WB	SB	Total		EB	NB	WB	SB	Total
6:30 AM	1	0	4	0	5	6:30 AM	0	0	0	0	0	6:30 AM	0	0	0	0	0
6:35 AM	1	0	1	0	2	6:35 AM	0	0	0	0	0	6:35 AM	0	0	0	0	0
6:40 AM	5	0	3	0	8	6:40 AM	0	0	0	0	0	6:40 AM	0	0	0	0	0
6:45 AM	6	1	4	1	12	6:45 AM	0	0	0	0	0	6:45 AM	0	0	0	0	0
6:50 AM	4	0	4	1	9	6:50 AM	0	0	0	0	0	6:50 AM	0	1	0	0	1
6:55 AM	2	0	4	1	7	6:55 AM	0	0	0	0	0	6:55 AM	0	0	0	0	0
7:00 AM	2	0	7	0	9	7:00 AM	0	0	0	0	0	7:00 AM	1	0	0	1	2
7:05 AM	1	0	4	0	5	7:05 AM	0	0	0	0	0	7:05 AM	0	1	0	0	1
7:10 AM	6	0	1	1	8	7:10 AM	0	0	0	0	0	7:10 AM	0	0	0	0	0
7:15 AM	4	0	5	0	9	7:15 AM	0	0	0	0	0	7:15 AM	0	0	0	0	0
7:20 AM	1	0	1	2	4	7:20 AM	0	0	0	0	0	7:20 AM	0	0	0	0	0
7:25 AM	3	0	2	1	6	7:25 AM	0	0	0	0	0	7:25 AM	0	0	0	0	0
7:30 AM	3	0	2	0	5	7:30 AM	0	0	0	0	0	7:30 AM	0	0	0	0	0
7:35 AM	3	0	3	2	8	7:35 AM	0	0	0	0	0	7:35 AM	0	1	0	0	1
7:40 AM	2	0	3	0	5	7:40 AM	0	0	0	0	0	7:40 AM	0	0	0	0	0
7:45 AM	5	0	3	1	9	7:45 AM	0	0	0	0	0	7:45 AM	0	0	0	0	0
7:50 AM	3	0	1	0	4	7:50 AM	0	0	0	0	0	7:50 AM	0	0	0	0	0
7:55 AM	2	0	1	2	5	7:55 AM	0	0	0	0	0	7:55 AM	0	1	0	0	1
8:00 AM	1	0	7	1	9	8:00 AM	0	0	0	0	0	8:00 AM	0	0	0	0	0
8:05 AM	3	1	4	1	9	8:05 AM	0	0	0	0	0	8:05 AM	0	0	0	0	0
8:10 AM	4	0	5	0	9	8:10 AM	0	0	0	0	0	8:10 AM	0	0	0	0	0
8:15 AM	7	0	6	0	13	8:15 AM	0	0	0	0	0	8:15 AM	0	1	0	0	1
8:20 AM	7	0	5	0	12	8:20 AM	0	0	0	0	0	8:20 AM	0	0	0	0	0
8:25 AM	5	0	3	0	8	8:25 AM	0	0	0	0	0	8:25 AM	1	0	0	0	1
Count Total	81	2	83	14	180	Count Total	0	0	0	0	0	Count Total	2	5	0	1	8
Peak Hour	34	0	33	10	77	Peak Hour	0	0	0	0	0	Peak Hour	0	3	0	0	3

ALL TRAFFIC DATA SERVICES
(303) 216-2439
www.alltrafficdata.net

Location: 3 MAIN ST & 27TH ST AM
Date: Thursday, November 17, 2022
Peak Hour: 07:05 AM - 08:05 AM
Peak 15-Minutes: 07:10 AM - 07:25 AM

Peak Hour

Motorized Vehicles

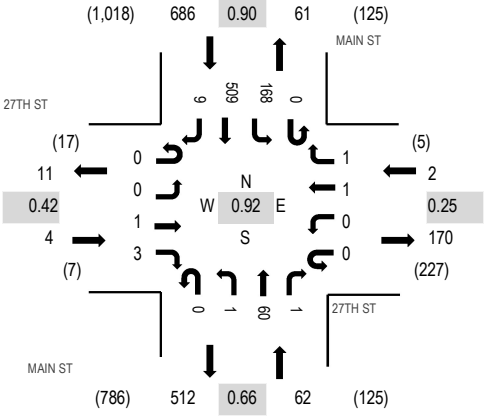

Heavy Vehicles

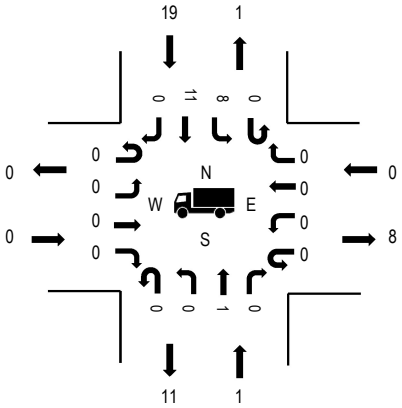

Pedestrians

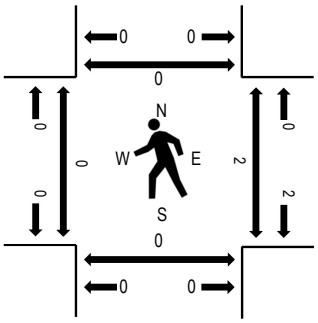

Note: Total study counts contained in parentheses.

	HV%	PHF
EB	0.0%	0.42
WB	0.0%	0.25
NB	1.6%	0.66
SB	2.8%	0.90
All	2.7%	0.92

Traffic Counts - Motorized Vehicles

Interval Start Time	27TH ST Eastbound				27TH ST Westbound				MAIN ST Northbound				MAIN ST Southbound				Total	Rolling Hour
	U-Turn	Left	Thru	Right	U-Turn	Left	Thru	Right	U-Turn	Left	Thru	Right	U-Turn	Left	Thru	Right		
6:30 AM	0	0	0	0	0	0	0	0	0	0	5	0	0	1	13	0	19	518
6:35 AM	0	0	0	0	0	0	0	0	0	0	2	0	0	3	11	0	16	565
6:40 AM	0	0	0	0	0	0	0	0	0	0	3	1	0	1	6	0	11	603
6:45 AM	0	0	1	0	0	0	0	0	0	0	2	0	0	3	19	0	25	663
6:50 AM	0	0	0	0	0	0	0	0	0	0	1	0	0	3	23	2	29	695
6:55 AM	0	0	0	0	0	0	0	0	0	0	2	0	0	5	29	0	36	726
7:00 AM	0	0	0	0	0	0	0	0	0	0	0	0	0	7	38	0	45	743
7:05 AM	0	0	0	0	0	0	0	1	0	0	5	0	0	10	55	0	71	754
7:10 AM	0	0	0	1	0	0	0	0	0	0	8	0	0	11	48	1	69	739
7:15 AM	0	0	0	0	0	0	0	0	0	0	6	0	0	15	42	0	63	717
7:20 AM	0	0	0	0	0	0	1	0	0	0	3	0	0	20	49	1	74	688
7:25 AM	0	0	0	0	0	0	0	0	0	0	3	0	0	16	41	0	60	655
7:30 AM	0	0	0	0	0	0	0	0	0	0	3	0	0	16	47	0	66	
7:35 AM	0	0	0	0	0	0	0	0	0	0	4	1	0	10	38	1	54	
7:40 AM	0	0	1	0	0	0	0	0	0	1	6	0	0	18	45	0	71	
7:45 AM	0	0	0	1	0	0	0	0	0	0	6	0	0	12	35	3	57	
7:50 AM	0	0	0	1	0	0	0	0	0	0	2	0	0	17	40	0	60	
7:55 AM	0	0	0	0	0	0	0	0	0	0	6	0	0	10	35	2	53	
8:00 AM	0	0	0	0	0	0	0	0	0	0	8	0	0	13	34	1	56	
8:05 AM	0	0	1	0	0	0	0	0	0	0	8	1	0	15	31	0	56	
8:10 AM	0	0	0	0	0	0	0	0	0	0	6	0	0	4	36	1	47	
8:15 AM	0	0	1	0	0	0	0	0	0	0	11	0	0	2	20	0	34	
8:20 AM	0	0	0	0	0	0	0	3	0	0	4	0	0	6	27	1	41	
8:25 AM	0	0	0	0	0	0	0	0	0	0	17	0	0	2	21	2	42	
Count Total	0	0	4	3	0	0	1	4	0	1	121	3	0	220	783	15	1,155	
Peak Hour	0	0	1	3	0	0	1	1	0	1	60	1	0	168	509	9	754	

Traffic Counts - Heavy Vehicles, Bicycles on Road, and Pedestrians/Bicycles on Crosswalk

Interval Start Time	Heavy Vehicles					Interval Start Time	Bicycles on Roadway					Interval Start Time	Pedestrians/Bicycles on Crosswalk				
	EB	NB	WB	SB	Total		EB	NB	WB	SB	Total		EB	NB	WB	SB	Total
6:30 AM	0	0	0	1	1	6:30 AM	0	0	0	0	0	6:30 AM	0	0	0	0	0
6:35 AM	0	0	0	1	1	6:35 AM	0	0	0	0	0	6:35 AM	0	0	0	0	0
6:40 AM	0	2	0	1	3	6:40 AM	0	0	0	0	0	6:40 AM	0	0	0	0	0
6:45 AM	0	1	0	2	3	6:45 AM	0	0	0	0	0	6:45 AM	0	0	0	0	0
6:50 AM	0	0	0	1	1	6:50 AM	0	0	0	0	0	6:50 AM	0	0	0	0	0
6:55 AM	0	0	0	1	1	6:55 AM	0	0	0	0	0	6:55 AM	0	0	0	0	0
7:00 AM	0	0	0	0	0	7:00 AM	0	0	0	0	0	7:00 AM	0	0	3	0	3
7:05 AM	0	0	0	2	2	7:05 AM	0	0	0	0	0	7:05 AM	0	0	0	0	0
7:10 AM	0	1	0	1	2	7:10 AM	0	0	0	0	0	7:10 AM	0	0	0	0	0
7:15 AM	0	0	0	2	2	7:15 AM	0	0	0	0	0	7:15 AM	0	0	1	0	1
7:20 AM	0	0	0	2	2	7:20 AM	0	0	0	0	0	7:20 AM	0	0	0	0	0
7:25 AM	0	0	0	1	1	7:25 AM	0	0	0	0	0	7:25 AM	0	0	0	0	0
7:30 AM	0	0	0	0	0	7:30 AM	0	0	0	0	0	7:30 AM	0	0	0	0	0
7:35 AM	0	0	0	3	3	7:35 AM	0	0	0	0	0	7:35 AM	0	0	0	0	0
7:40 AM	0	0	0	2	2	7:40 AM	0	0	0	0	0	7:40 AM	0	0	0	0	0
7:45 AM	0	0	0	1	1	7:45 AM	0	0	0	0	0	7:45 AM	0	0	0	0	0
7:50 AM	0	0	0	2	2	7:50 AM	0	0	0	0	0	7:50 AM	0	0	0	0	0
7:55 AM	0	0	0	1	1	7:55 AM	0	0	0	0	0	7:55 AM	0	0	1	0	1
8:00 AM	0	0	0	2	2	8:00 AM	0	0	0	0	0	8:00 AM	0	0	0	0	0
8:05 AM	0	1	0	4	5	8:05 AM	0	0	0	0	0	8:05 AM	0	0	0	0	0
8:10 AM	0	0	0	0	0	8:10 AM	0	0	0	0	0	8:10 AM	0	0	0	0	0
8:15 AM	0	0	0	0	0	8:15 AM	0	0	0	0	0	8:15 AM	0	0	0	0	0
8:20 AM	0	0	0	1	1	8:20 AM	0	0	0	0	0	8:20 AM	0	0	0	0	0
8:25 AM	0	0	0	0	0	8:25 AM	0	0	0	0	0	8:25 AM	2	0	0	0	2
Count Total	0	5	0	31	36	Count Total	0	0	0	0	0	Count Total	2	0	5	0	7
Peak Hour	0	1	0	19	20	Peak Hour	0	0	0	0	0	Peak Hour	0	0	2	0	2

ALL TRAFFIC DATA SERVICES
(303) 216-2439
www.alltrafficdata.net

Location: 4 MAIN ST & 28TH ST AM
Date: Thursday, November 17, 2022
Peak Hour: 07:00 AM - 08:00 AM
Peak 15-Minutes: 07:10 AM - 07:25 AM

Peak Hour

Motorized Vehicles

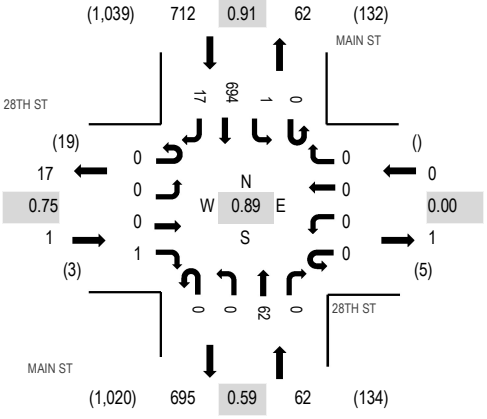

Heavy Vehicles

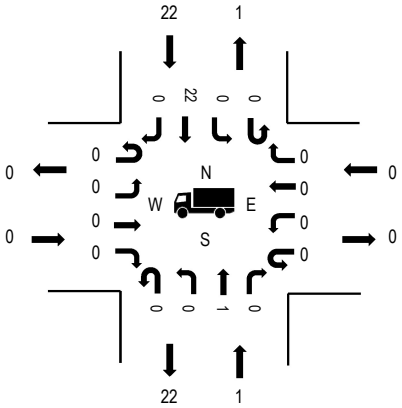

Pedestrians

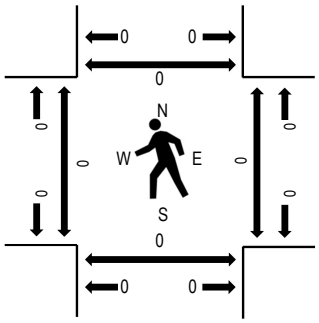

Note: Total study counts contained in parentheses.

	HV%	PHF
EB	0.0%	0.75
WB	0.0%	0.00
NB	1.6%	0.59
SB	3.1%	0.91
All	3.0%	0.89

Traffic Counts - Motorized Vehicles

Interval Start Time	28TH ST Eastbound				28TH ST Westbound				MAIN ST Northbound				MAIN ST Southbound				Total	Rolling Hour
	U-Turn	Left	Thru	Right	U-Turn	Left	Thru	Right	U-Turn	Left	Thru	Right	U-Turn	Left	Thru	Right		
6:30 AM	0	0	0	0	0	0	0	0	0	0	4	0	0	0	16	0	20	547
6:35 AM	0	0	0	0	0	0	0	0	0	0	1	0	0	0	11	0	12	591
6:40 AM	0	0	0	0	0	0	0	0	0	0	5	0	0	0	12	0	17	638
6:45 AM	0	0	0	0	0	0	0	0	0	0	1	0	0	0	24	0	25	687
6:50 AM	0	0	0	0	0	0	0	0	0	0	2	0	0	0	24	0	26	719
6:55 AM	0	0	0	0	0	0	0	0	0	0	1	0	0	0	36	0	37	750
7:00 AM	0	0	0	0	0	0	0	0	0	0	1	0	0	0	59	0	60	775
7:05 AM	0	0	0	0	0	0	0	0	0	0	6	0	0	0	60	3	69	767
7:10 AM	0	0	0	0	0	0	0	0	0	0	8	0	0	1	56	2	67	754
7:15 AM	0	0	0	0	0	0	0	0	0	0	6	0	0	0	70	2	78	722
7:20 AM	0	0	0	0	0	0	0	0	0	0	9	0	0	0	61	2	72	677
7:25 AM	0	0	0	0	0	0	0	0	0	0	3	0	0	0	59	2	64	659
7:30 AM	0	0	0	0	0	0	0	0	0	0	4	0	0	0	59	1	64	
7:35 AM	0	0	0	1	0	0	0	0	0	0	3	0	0	0	55	0	59	
7:40 AM	0	0	0	0	0	0	0	0	0	0	6	0	0	0	60	0	66	
7:45 AM	0	0	0	0	0	0	0	0	0	0	6	0	0	0	51	0	57	
7:50 AM	0	0	0	0	0	0	0	0	0	0	3	0	0	0	53	1	57	
7:55 AM	0	0	0	0	0	0	0	0	0	0	7	0	0	0	51	4	62	
8:00 AM	0	0	1	0	0	0	0	0	0	0	7	0	0	0	43	1	52	
8:05 AM	0	0	0	0	0	0	0	0	0	0	8	1	0	0	46	1	56	
8:10 AM	0	0	0	0	0	0	0	0	0	0	4	1	0	0	30	0	35	
8:15 AM	0	0	0	0	0	0	0	0	0	0	11	0	0	0	22	0	33	
8:20 AM	0	0	1	0	0	0	0	0	0	0	10	0	0	0	43	0	54	
8:25 AM	0	0	0	0	0	0	0	0	0	0	16	0	0	0	18	0	34	
Count Total	0	0	2	1	0	0	0	0	0	0	132	2	0	1	1,019	19	1,176	
Peak Hour	0	0	0	1	0	0	0	0	0	0	62	0	0	1	694	17	775	

Traffic Counts - Heavy Vehicles, Bicycles on Road, and Pedestrians/Bicycles on Crosswalk

Interval Start Time	Heavy Vehicles					Interval Start Time	Bicycles on Roadway					Interval Start Time	Pedestrians/Bicycles on Crosswalk				
	EB	NB	WB	SB	Total		EB	NB	WB	SB	Total		EB	NB	WB	SB	Total
6:30 AM	0	0	0	2	2	6:30 AM	0	0	0	0	0	6:30 AM	0	0	0	0	0
6:35 AM	0	0	0	0	0	6:35 AM	0	0	0	0	0	6:35 AM	0	0	0	0	0
6:40 AM	0	3	0	1	4	6:40 AM	0	0	0	0	0	6:40 AM	0	0	0	0	0
6:45 AM	0	0	0	2	2	6:45 AM	0	0	0	0	0	6:45 AM	0	0	0	0	0
6:50 AM	0	0	0	2	2	6:50 AM	0	0	0	0	0	6:50 AM	0	0	0	0	0
6:55 AM	0	0	0	0	0	6:55 AM	0	0	0	0	0	6:55 AM	0	0	0	0	0
7:00 AM	0	0	0	0	0	7:00 AM	0	0	0	0	0	7:00 AM	0	0	0	0	0
7:05 AM	0	0	0	4	4	7:05 AM	0	0	0	0	0	7:05 AM	0	0	0	0	0
7:10 AM	0	1	0	0	1	7:10 AM	0	0	0	0	0	7:10 AM	0	0	0	0	0
7:15 AM	0	0	0	2	2	7:15 AM	0	0	0	0	0	7:15 AM	0	0	0	0	0
7:20 AM	0	0	0	2	2	7:20 AM	0	0	0	0	0	7:20 AM	0	0	0	0	0
7:25 AM	0	0	0	1	1	7:25 AM	0	0	0	0	0	7:25 AM	0	0	0	0	0
7:30 AM	0	0	0	1	1	7:30 AM	0	0	0	0	0	7:30 AM	0	0	0	0	0
7:35 AM	0	0	0	3	3	7:35 AM	0	0	0	0	0	7:35 AM	0	0	0	0	0
7:40 AM	0	0	0	4	4	7:40 AM	0	0	0	0	0	7:40 AM	0	0	0	0	0
7:45 AM	0	0	0	1	1	7:45 AM	0	0	0	0	0	7:45 AM	0	0	0	0	0
7:50 AM	0	0	0	2	2	7:50 AM	0	0	0	0	0	7:50 AM	0	0	0	0	0
7:55 AM	0	0	0	2	2	7:55 AM	0	0	0	0	0	7:55 AM	0	0	0	0	0
8:00 AM	0	0	0	3	3	8:00 AM	0	0	0	0	0	8:00 AM	0	0	0	0	0
8:05 AM	0	0	0	2	2	8:05 AM	0	0	0	0	0	8:05 AM	0	0	0	0	0
8:10 AM	0	0	0	0	0	8:10 AM	0	0	0	0	0	8:10 AM	0	0	0	0	0
8:15 AM	0	0	0	0	0	8:15 AM	0	0	0	0	0	8:15 AM	0	0	0	0	0
8:20 AM	0	0	0	2	2	8:20 AM	0	0	0	0	0	8:20 AM	0	0	0	0	0
8:25 AM	0	0	0	0	0	8:25 AM	0	0	0	0	0	8:25 AM	0	0	0	0	0
Count Total	0	4	0	36	40	Count Total	0	0	0	0	0	Count Total	0	0	0	0	0
Peak Hour	0	1	0	22	23	Peak Hour	0	0	0	0	0	Peak Hour	0	0	0	0	0

ALL TRAFFIC DATA SERVICES
(303) 216-2439
www.alltrafficdata.net

Location: 6 MAIN ST & 33RD ST AM
Date: Thursday, November 17, 2022
Peak Hour: 07:05 AM - 08:05 AM
Peak 15-Minutes: 07:20 AM - 07:35 AM

Peak Hour

Motorized Vehicles

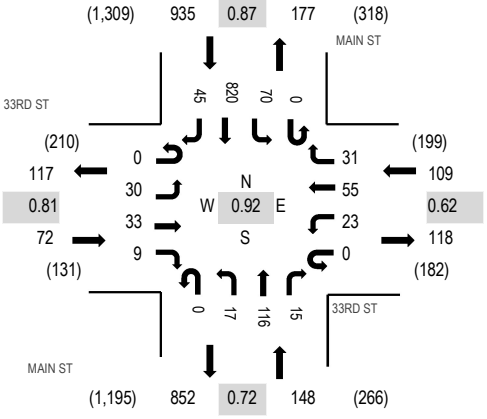

Heavy Vehicles

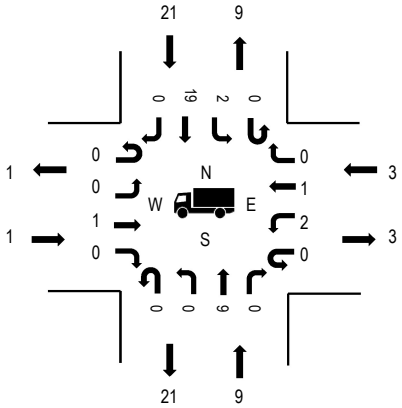

Pedestrians

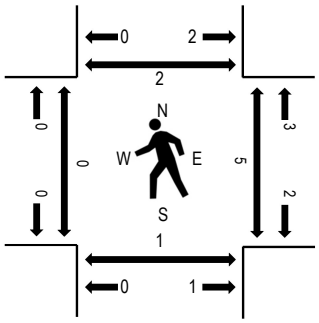

Note: Total study counts contained in parentheses.

	HV%	PHF
EB	1.4%	0.81
WB	2.8%	0.62
NB	6.1%	0.72
SB	2.2%	0.87
All	2.7%	0.92

Traffic Counts - Motorized Vehicles

Interval Start Time	33RD ST Eastbound				33RD ST Westbound				MAIN ST Northbound				MAIN ST Southbound				Total	Rolling Hour
	U-Turn	Left	Thru	Right	U-Turn	Left	Thru	Right	U-Turn	Left	Thru	Right	U-Turn	Left	Thru	Right		
6:30 AM	0	1	3	0	0	0	2	1	0	0	8	1	0	1	15	0	32	813
6:35 AM	0	0	2	0	0	1	8	2	0	0	4	0	0	1	9	0	27	897
6:40 AM	0	1	2	1	0	0	4	1	0	0	6	0	0	0	11	1	27	971
6:45 AM	0	3	0	0	0	3	7	2	0	0	2	1	0	0	23	2	43	1,041
6:50 AM	0	0	2	1	0	2	4	4	0	0	2	0	0	3	25	4	47	1,117
6:55 AM	0	0	1	0	0	1	4	0	0	0	4	1	0	3	37	0	51	1,177
7:00 AM	0	2	2	2	0	2	3	1	0	0	7	0	0	2	53	0	74	1,222
7:05 AM	0	1	1	2	0	1	3	0	0	1	10	1	0	0	73	0	93	1,264
7:10 AM	0	2	2	0	0	2	4	5	0	1	11	2	0	4	60	1	94	1,257
7:15 AM	0	0	2	1	0	4	1	3	0	2	10	0	0	5	65	6	99	1,211
7:20 AM	0	1	1	0	0	3	2	1	0	1	14	0	0	9	78	1	111	1,176
7:25 AM	0	2	4	2	0	1	5	1	0	2	9	2	0	7	75	5	115	1,142
7:30 AM	0	3	5	1	0	1	3	0	0	2	6	0	0	7	81	7	116	
7:35 AM	0	2	1	0	0	2	4	2	0	2	8	1	0	4	72	3	101	
7:40 AM	0	5	2	0	0	0	5	2	0	0	5	2	0	5	69	2	97	
7:45 AM	0	3	2	0	0	2	9	7	0	1	11	1	0	7	69	7	119	
7:50 AM	0	6	5	1	0	5	9	1	0	2	12	1	0	7	53	5	107	
7:55 AM	0	2	5	1	0	2	5	5	0	0	9	3	0	8	53	3	96	
8:00 AM	0	3	3	1	0	0	5	4	0	3	11	2	0	7	72	5	116	
8:05 AM	0	3	3	1	0	1	3	2	0	1	13	1	0	6	45	7	86	
8:10 AM	0	0	4	0	0	1	4	5	0	3	6	1	0	0	24	0	48	
8:15 AM	0	1	5	1	0	0	2	4	0	3	17	1	0	3	24	3	64	
8:20 AM	0	3	1	1	0	3	4	0	0	0	13	1	0	3	38	10	77	
8:25 AM	0	4	8	1	0	3	4	2	0	3	17	2	0	0	14	7	65	
Count Total	0	48	66	17	0	40	104	55	0	27	215	24	0	92	1,138	79	1,905	
Peak Hour	0	30	33	9	0	23	55	31	0	17	116	15	0	70	820	45	1,264	

Traffic Counts - Heavy Vehicles, Bicycles on Road, and Pedestrians/Bicycles on Crosswalk

Interval Start Time	Heavy Vehicles					Interval Start Time	Bicycles on Roadway					Interval Start Time	Pedestrians/Bicycles on Crosswalk				
	EB	NB	WB	SB	Total		EB	NB	WB	SB	Total		EB	NB	WB	SB	Total
6:30 AM	0	1	0	2	3	6:30 AM	0	0	0	0	0	6:30 AM	0	0	0	0	0
6:35 AM	0	0	0	0	0	6:35 AM	0	0	0	0	0	6:35 AM	0	0	0	0	0
6:40 AM	0	2	0	1	3	6:40 AM	0	0	0	0	0	6:40 AM	0	0	0	0	0
6:45 AM	0	2	0	2	4	6:45 AM	0	0	0	0	0	6:45 AM	0	0	0	0	0
6:50 AM	0	1	0	2	3	6:50 AM	0	0	0	0	0	6:50 AM	0	0	1	0	1
6:55 AM	0	0	0	0	0	6:55 AM	0	0	0	0	0	6:55 AM	0	0	0	0	0
7:00 AM	0	1	0	0	1	7:00 AM	0	0	0	0	0	7:00 AM	0	0	0	0	0
7:05 AM	0	0	0	3	3	7:05 AM	0	0	0	0	0	7:05 AM	0	0	1	0	1
7:10 AM	0	1	0	1	2	7:10 AM	0	0	0	0	0	7:10 AM	0	1	0	0	1
7:15 AM	0	2	1	3	6	7:15 AM	0	0	0	0	0	7:15 AM	0	0	0	0	0
7:20 AM	0	2	0	1	3	7:20 AM	0	0	0	0	0	7:20 AM	0	0	0	0	0
7:25 AM	0	0	1	1	2	7:25 AM	0	0	0	0	0	7:25 AM	0	0	0	0	0
7:30 AM	1	0	0	4	5	7:30 AM	0	0	0	0	0	7:30 AM	0	0	1	1	2
7:35 AM	0	1	0	2	3	7:35 AM	0	0	0	0	0	7:35 AM	0	1	1	0	2
7:40 AM	0	0	0	1	1	7:40 AM	0	0	0	0	0	7:40 AM	0	0	2	0	2
7:45 AM	0	0	0	1	1	7:45 AM	0	0	0	0	0	7:45 AM	0	0	0	0	0
7:50 AM	0	1	1	1	3	7:50 AM	0	0	0	0	0	7:50 AM	0	0	0	0	0
7:55 AM	0	1	0	1	2	7:55 AM	0	0	0	0	0	7:55 AM	0	0	0	0	0
8:00 AM	0	1	0	2	3	8:00 AM	0	0	0	0	0	8:00 AM	0	0	0	1	1
8:05 AM	0	1	0	2	3	8:05 AM	0	0	0	0	0	8:05 AM	0	0	0	0	0
8:10 AM	0	1	1	0	2	8:10 AM	0	0	0	0	0	8:10 AM	0	1	0	1	2
8:15 AM	0	1	1	0	2	8:15 AM	0	0	0	0	0	8:15 AM	0	0	0	0	0
8:20 AM	0	1	0	1	2	8:20 AM	0	0	0	0	0	8:20 AM	0	0	0	0	0
8:25 AM	0	2	2	1	5	8:25 AM	0	0	0	0	0	8:25 AM	0	0	1	0	1
Count Total	1	22	7	32	62	Count Total	0	0	0	0	0	Count Total	0	3	7	3	13
Peak Hour	1	9	3	21	34	Peak Hour	0	0	0	0	0	Peak Hour	0	2	5	2	9

ALL TRAFFIC DATA SERVICES
(303) 216-2439
www.alltrafficdata.net

Location: 7 MAIN ST & 37TH ST AM
Date: Thursday, November 17, 2022
Peak Hour: 07:05 AM - 08:05 AM
Peak 15-Minutes: 07:35 AM - 07:50 AM

Peak Hour

Motorized Vehicles

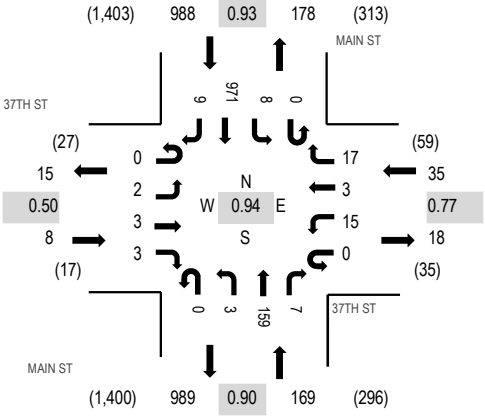

Heavy Vehicles

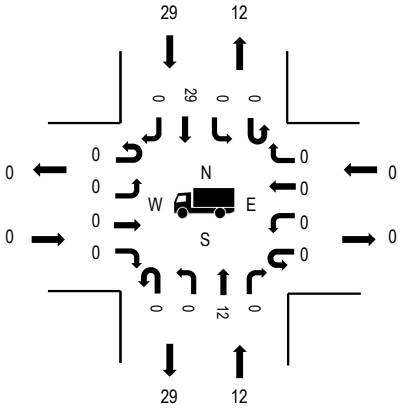

Pedestrians

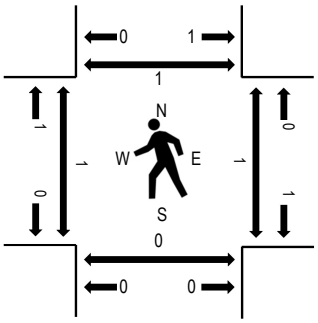

Note: Total study counts contained in parentheses.

	HV%	PHF
EB	0.0%	0.50
WB	0.0%	0.77
NB	7.1%	0.90
SB	2.9%	0.93
All	3.4%	0.94

Traffic Counts - Motorized Vehicles

Interval Start Time	37TH ST Eastbound				37TH ST Westbound				MAIN ST Northbound				MAIN ST Southbound				Total	Rolling Hour
	U-Turn	Left	Thru	Right	U-Turn	Left	Thru	Right	U-Turn	Left	Thru	Right	U-Turn	Left	Thru	Right		
6:30 AM	0	0	1	0	0	1	0	0	0	0	6	2	0	1	17	0	28	764
6:35 AM	0	0	0	0	0	0	0	0	0	0	7	0	0	1	9	0	17	829
6:40 AM	0	0	0	0	0	0	0	2	0	1	8	0	0	0	9	0	20	918
6:45 AM	0	0	0	0	0	0	0	1	0	0	7	1	0	0	29	0	38	1,006
6:50 AM	0	0	0	0	0	1	0	2	0	0	8	0	0	1	26	1	39	1,073
6:55 AM	0	0	0	0	0	1	0	2	0	0	3	1	0	0	40	0	47	1,129
7:00 AM	0	0	0	0	0	0	0	0	0	0	10	0	0	0	73	0	83	1,181
7:05 AM	0	0	1	1	0	0	0	2	0	0	13	0	0	0	61	0	78	1,200
7:10 AM	0	0	0	0	0	1	0	2	0	0	19	0	0	2	77	0	101	1,185
7:15 AM	0	0	0	0	0	1	0	3	0	0	10	0	0	0	80	1	95	1,145
7:20 AM	0	0	0	0	0	1	1	0	0	1	19	2	0	1	88	0	113	1,103
7:25 AM	0	0	0	0	0	1	0	0	0	0	12	0	0	0	92	0	105	1,064
7:30 AM	0	0	0	0	0	1	0	1	0	0	8	0	0	0	82	1	93	
7:35 AM	0	0	0	2	0	3	0	1	0	0	8	1	0	1	87	3	106	
7:40 AM	0	0	0	0	0	1	1	2	0	0	10	1	0	2	91	0	108	
7:45 AM	0	1	0	0	0	1	0	3	0	1	15	1	0	0	83	0	105	
7:50 AM	0	1	1	0	0	3	0	1	0	0	15	1	0	1	72	0	95	
7:55 AM	0	0	0	0	0	1	0	1	0	0	16	0	0	0	80	1	99	
8:00 AM	0	0	1	0	0	1	1	1	0	1	14	1	0	1	78	3	102	
8:05 AM	0	0	0	0	0	1	0	2	0	0	17	0	0	0	43	0	63	
8:10 AM	0	0	0	1	0	0	1	2	0	0	11	0	0	2	43	1	61	
8:15 AM	0	0	1	0	0	0	0	0	0	0	19	2	0	0	30	1	53	
8:20 AM	0	0	1	4	0	0	1	2	0	0	14	1	0	0	49	2	74	
8:25 AM	0	0	0	1	0	0	1	4	0	0	8	1	0	1	33	3	52	
Count Total	0	2	6	9	0	19	6	34	0	4	277	15	0	14	1,372	17	1,775	
Peak Hour	0	2	3	3	0	15	3	17	0	3	159	7	0	8	971	9	1,200	

Traffic Counts - Heavy Vehicles, Bicycles on Road, and Pedestrians/Bicycles on Crosswalk

Interval Start Time	Heavy Vehicles					Interval Start Time	Bicycles on Roadway					Interval Start Time	Pedestrians/Bicycles on Crosswalk				
	EB	NB	WB	SB	Total		EB	NB	WB	SB	Total		EB	NB	WB	SB	Total
6:30 AM	0	0	0	2	2	6:30 AM	0	0	0	0	0	6:30 AM	0	0	0	0	0
6:35 AM	0	0	0	0	0	6:35 AM	0	0	0	0	0	6:35 AM	0	0	0	0	0
6:40 AM	0	3	0	1	4	6:40 AM	0	0	0	0	0	6:40 AM	0	0	0	0	0
6:45 AM	0	0	0	1	1	6:45 AM	0	0	0	0	0	6:45 AM	1	0	0	0	1
6:50 AM	0	1	0	2	3	6:50 AM	0	0	0	0	0	6:50 AM	0	0	0	0	0
6:55 AM	0	1	0	0	1	6:55 AM	0	0	0	0	0	6:55 AM	0	0	0	0	0
7:00 AM	0	1	0	1	2	7:00 AM	0	0	0	0	0	7:00 AM	0	0	1	0	1
7:05 AM	0	0	0	5	5	7:05 AM	0	0	0	0	0	7:05 AM	0	0	0	0	0
7:10 AM	0	2	0	1	3	7:10 AM	0	0	0	0	0	7:10 AM	0	0	0	0	0
7:15 AM	0	1	0	2	3	7:15 AM	0	0	0	0	0	7:15 AM	0	0	0	0	0
7:20 AM	0	3	0	2	5	7:20 AM	0	0	0	0	0	7:20 AM	0	0	0	0	0
7:25 AM	0	2	0	1	3	7:25 AM	0	0	0	0	0	7:25 AM	0	0	0	0	0
7:30 AM	0	0	0	3	3	7:30 AM	0	0	0	0	0	7:30 AM	0	0	0	0	0
7:35 AM	0	0	0	4	4	7:35 AM	0	0	0	0	0	7:35 AM	0	0	0	1	1
7:40 AM	0	1	0	3	4	7:40 AM	0	0	0	0	0	7:40 AM	0	0	0	0	0
7:45 AM	0	0	0	1	1	7:45 AM	0	0	0	0	0	7:45 AM	1	0	0	0	1
7:50 AM	0	0	0	1	1	7:50 AM	0	0	0	0	0	7:50 AM	0	0	1	0	1
7:55 AM	0	2	0	2	4	7:55 AM	0	0	0	0	0	7:55 AM	0	0	0	0	0
8:00 AM	0	1	0	4	5	8:00 AM	0	0	0	0	0	8:00 AM	0	0	0	0	0
8:05 AM	0	0	0	2	2	8:05 AM	0	0	0	0	0	8:05 AM	1	0	0	0	1
8:10 AM	0	2	0	0	2	8:10 AM	0	0	0	0	0	8:10 AM	1	0	0	0	1
8:15 AM	0	1	0	0	1	8:15 AM	0	0	0	0	0	8:15 AM	1	0	0	0	1
8:20 AM	0	2	0	2	4	8:20 AM	0	0	0	0	0	8:20 AM	0	0	0	0	0
8:25 AM	0	0	0	3	3	8:25 AM	0	0	0	0	0	8:25 AM	0	0	0	0	0
Count Total	0	23	0	43	66	Count Total	0	0	0	0	0	Count Total	5	0	2	1	8
Peak Hour	0	12	0	29	41	Peak Hour	0	0	0	0	0	Peak Hour	1	0	1	1	3

ALL TRAFFIC DATA SERVICES
(303) 216-2439
www.alltrafficdata.net

Location: 8 MAIN ST & 39TH ST AM
Date: Thursday, November 17, 2022
Peak Hour: 07:05 AM - 08:05 AM
Peak 15-Minutes: 07:50 AM - 08:05 AM

Peak Hour

Motorized Vehicles

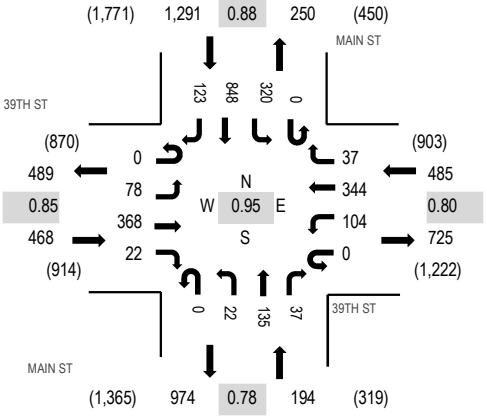

Heavy Vehicles

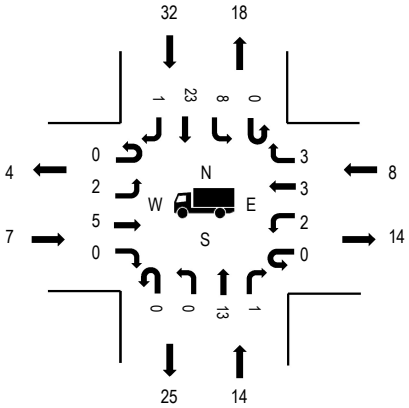

Pedestrians

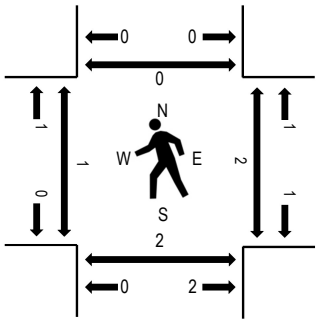

Note: Total study counts contained in parentheses.

	HV%	PHF
EB	1.5%	0.85
WB	1.6%	0.80
NB	7.2%	0.78
SB	2.5%	0.88
All	2.5%	0.95

Traffic Counts - Motorized Vehicles

Interval Start Time	39TH ST Eastbound				39TH ST Westbound				MAIN ST Northbound				MAIN ST Southbound				Total	Rolling Hour
	U-Turn	Left	Thru	Right	U-Turn	Left	Thru	Right	U-Turn	Left	Thru	Right	U-Turn	Left	Thru	Right		
6:30 AM	0	9	21	1	0	3	18	3	0	3	3	2	0	4	14	4	85	1,740
6:35 AM	0	7	25	2	0	0	28	3	0	1	5	1	0	3	8	5	88	1,870
6:40 AM	0	1	36	0	0	4	22	4	0	0	5	1	0	6	4	9	92	1,968
6:45 AM	0	3	20	0	0	12	31	3	0	0	7	2	0	10	17	11	116	2,072
6:50 AM	0	7	27	1	0	6	16	4	0	2	5	1	0	9	17	6	101	2,165
6:55 AM	0	5	30	2	0	8	27	3	0	0	4	0	0	2	28	5	114	2,276
7:00 AM	0	8	20	4	0	17	20	3	0	0	3	4	0	19	45	10	153	2,369
7:05 AM	0	5	30	2	0	5	17	2	0	1	18	7	0	25	65	12	189	2,438
7:10 AM	0	6	41	0	0	10	21	1	0	0	17	1	0	30	58	9	194	2,407
7:15 AM	0	7	34	1	0	14	16	4	0	2	5	2	0	26	68	11	190	2,356
7:20 AM	0	8	26	4	0	7	20	6	0	3	15	4	0	25	76	7	201	2,312
7:25 AM	0	5	24	1	0	7	44	5	0	2	10	3	0	31	78	7	217	2,259
7:30 AM	0	3	28	2	0	6	17	4	0	0	7	4	0	43	87	14	215	
7:35 AM	0	10	24	1	0	9	29	4	0	2	5	3	0	21	72	6	186	
7:40 AM	0	8	27	3	0	17	26	2	0	0	5	2	0	19	73	14	196	
7:45 AM	0	9	30	1	0	5	26	2	0	5	8	7	0	28	78	10	209	
7:50 AM	0	4	37	2	0	10	48	1	0	4	18	3	0	24	49	12	212	
7:55 AM	0	8	25	2	0	9	39	1	0	3	13	1	0	23	68	15	207	
8:00 AM	0	5	42	3	0	5	41	5	0	0	14	0	0	25	76	6	222	
8:05 AM	0	5	39	4	0	3	34	1	0	2	8	2	0	18	37	5	158	
8:10 AM	0	10	34	2	0	7	18	5	0	3	11	3	0	15	30	5	143	
8:15 AM	0	6	34	2	0	5	31	2	0	1	15	4	0	19	23	4	146	
8:20 AM	0	5	37	0	0	12	18	8	0	3	9	2	0	8	37	9	148	
8:25 AM	0	4	32	3	0	14	18	7	0	2	9	2	0	5	19	10	125	
Count Total	0	148	723	43	0	195	625	83	0	39	219	61	0	438	1,127	206	3,907	
Peak Hour	0	78	368	22	0	104	344	37	0	22	135	37	0	320	848	123	2,438	

Traffic Counts - Heavy Vehicles, Bicycles on Road, and Pedestrians/Bicycles on Crosswalk

Interval Start Time	Heavy Vehicles					Interval Start Time	Bicycles on Roadway					Interval Start Time	Pedestrians/Bicycles on Crosswalk				
	EB	NB	WB	SB	Total		EB	NB	WB	SB	Total		EB	NB	WB	SB	Total
6:30 AM	0	0	0	2	2	6:30 AM	0	0	0	0	0	6:30 AM	0	0	0	0	0
6:35 AM	0	0	0	0	0	6:35 AM	0	0	0	0	0	6:35 AM	0	0	0	0	0
6:40 AM	0	0	0	1	1	6:40 AM	0	0	0	0	0	6:40 AM	0	0	0	0	0
6:45 AM	0	0	0	1	1	6:45 AM	0	0	0	0	0	6:45 AM	2	0	0	0	2
6:50 AM	0	1	3	2	6	6:50 AM	0	0	0	0	0	6:50 AM	0	0	0	2	2
6:55 AM	0	1	1	0	2	6:55 AM	0	0	0	0	0	6:55 AM	1	0	1	1	3
7:00 AM	1	0	0	5	6	7:00 AM	0	0	0	0	0	7:00 AM	0	0	1	1	2
7:05 AM	0	1	0	7	8	7:05 AM	0	0	0	0	0	7:05 AM	0	0	0	0	0
7:10 AM	0	1	1	1	3	7:10 AM	0	0	1	0	1	7:10 AM	0	0	0	0	0
7:15 AM	0	1	0	5	6	7:15 AM	0	0	0	0	0	7:15 AM	0	0	1	0	1
7:20 AM	0	3	0	1	4	7:20 AM	0	0	0	0	0	7:20 AM	0	0	1	0	1
7:25 AM	1	2	2	1	6	7:25 AM	0	0	0	0	0	7:25 AM	0	0	0	0	0
7:30 AM	1	0	1	3	5	7:30 AM	0	0	0	0	0	7:30 AM	0	2	0	0	2
7:35 AM	2	1	0	5	8	7:35 AM	0	0	0	0	0	7:35 AM	0	0	0	0	0
7:40 AM	0	1	0	2	3	7:40 AM	0	0	0	0	0	7:40 AM	0	0	0	0	0
7:45 AM	1	0	1	2	4	7:45 AM	0	0	0	0	0	7:45 AM	1	0	0	0	1
7:50 AM	1	0	2	1	4	7:50 AM	0	0	0	0	0	7:50 AM	0	0	0	0	0
7:55 AM	0	2	1	2	5	7:55 AM	0	0	0	0	0	7:55 AM	0	0	0	0	0
8:00 AM	1	2	0	2	5	8:00 AM	0	0	0	0	0	8:00 AM	0	0	0	0	0
8:05 AM	2	2	0	3	7	8:05 AM	0	0	0	0	0	8:05 AM	1	0	0	0	1
8:10 AM	0	1	0	1	2	8:10 AM	0	0	0	0	0	8:10 AM	0	0	0	0	0
8:15 AM	1	2	1	0	4	8:15 AM	0	0	0	0	0	8:15 AM	0	0	0	0	0
8:20 AM	1	2	0	2	5	8:20 AM	0	0	0	0	0	8:20 AM	0	0	1	0	1
8:25 AM	1	0	0	3	4	8:25 AM	0	0	0	0	0	8:25 AM	0	1	1	0	2
Count Total	13	23	13	52	101	Count Total	0	0	1	0	1	Count Total	5	3	6	4	18
Peak Hour	7	14	8	32	61	Peak Hour	0	0	1	0	1	Peak Hour	1	2	2	0	5

ALL TRAFFIC DATA SERVICES
(303) 216-2439
www.alltrafficdata.net

Location: 9 MAIN ST & 40TH ST AM
Date: Thursday, November 17, 2022
Peak Hour: 07:05 AM - 08:05 AM
Peak 15-Minutes: 07:20 AM - 07:35 AM

Peak Hour

Motorized Vehicles

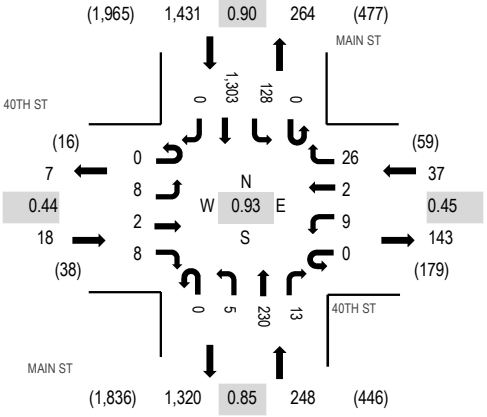

Heavy Vehicles

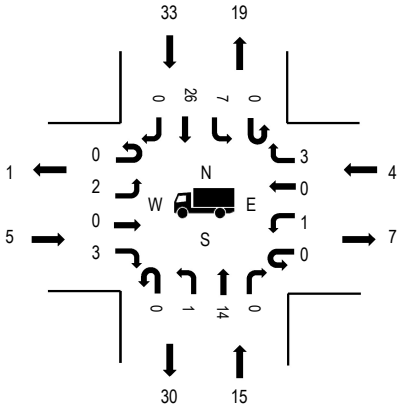

Pedestrians

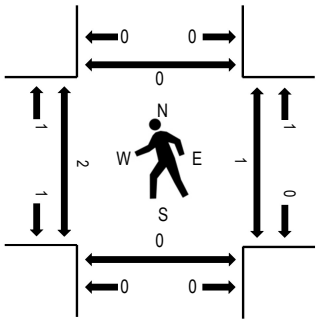

Note: Total study counts contained in parentheses.

	HV%	PHF
EB	27.8%	0.44
WB	10.8%	0.45
NB	6.0%	0.85
SB	2.3%	0.90
All	3.3%	0.93

Traffic Counts - Motorized Vehicles

Interval Start Time	40TH ST Eastbound				40TH ST Westbound				MAIN ST Northbound				MAIN ST Southbound				Total	Rolling Hour
	U-Turn	Left	Thru	Right	U-Turn	Left	Thru	Right	U-Turn	Left	Thru	Right	U-Turn	Left	Thru	Right		
6:30 AM	0	0	0	0	0	0	0	0	0	0	16	0	0	0	23	0	39	1,086
6:35 AM	0	0	0	0	0	0	0	0	0	0	14	0	0	0	21	0	35	1,203
6:40 AM	0	2	0	0	0	0	0	0	0	0	11	0	0	2	25	0	40	1,307
6:45 AM	0	0	0	1	0	0	0	0	0	1	11	1	0	0	26	0	40	1,417
6:50 AM	0	2	0	0	0	0	0	1	0	1	14	0	0	1	37	0	56	1,513
6:55 AM	0	0	0	0	0	0	1	0	0	1	11	0	0	1	46	0	60	1,614
7:00 AM	0	0	0	1	0	0	0	0	0	1	8	0	0	3	72	1	86	1,689
7:05 AM	0	4	0	1	0	0	0	0	0	0	20	1	0	6	108	0	140	1,734
7:10 AM	0	1	1	0	0	2	0	4	0	0	20	2	0	9	107	0	146	1,722
7:15 AM	0	0	0	1	0	0	0	1	0	0	13	2	0	10	108	0	135	1,660
7:20 AM	0	0	0	1	0	1	0	1	0	4	23	0	0	16	113	0	159	1,593
7:25 AM	0	0	0	2	0	0	1	0	0	1	17	0	0	9	120	0	150	1,507
7:30 AM	0	0	0	1	0	1	0	2	0	0	12	2	0	13	125	0	156	
7:35 AM	0	0	0	0	0	0	0	2	0	0	20	0	0	7	110	0	139	
7:40 AM	0	0	1	1	0	0	0	1	0	0	15	0	0	14	118	0	150	
7:45 AM	0	1	0	1	0	1	0	0	0	0	21	1	0	10	101	0	136	
7:50 AM	0	1	0	0	0	1	0	3	0	0	22	3	0	13	114	0	157	
7:55 AM	0	0	0	0	0	0	0	3	0	0	24	1	0	11	96	0	135	
8:00 AM	0	1	0	0	0	3	1	9	0	0	23	1	0	10	83	0	131	
8:05 AM	0	5	0	4	0	0	0	10	0	2	13	0	0	9	85	0	128	
8:10 AM	0	2	0	1	0	0	0	1	0	0	24	3	0	6	47	0	84	
8:15 AM	0	1	0	0	0	0	0	3	0	0	19	1	0	2	42	0	68	
8:20 AM	0	0	0	0	0	0	0	1	0	0	24	2	0	1	45	0	73	
8:25 AM	0	1	0	0	0	3	0	2	0	1	17	2	0	2	37	0	65	
Count Total	0	21	2	15	0	12	3	44	0	12	412	22	0	155	1,809	1	2,508	
Peak Hour	0	8	2	8	0	9	2	26	0	5	230	13	0	128	1,303	0	1,734	

Traffic Counts - Heavy Vehicles, Bicycles on Road, and Pedestrians/Bicycles on Crosswalk

Interval Start Time	Heavy Vehicles					Interval Start Time	Bicycles on Roadway					Interval Start Time	Pedestrians/Bicycles on Crosswalk				
	EB	NB	WB	SB	Total		EB	NB	WB	SB	Total		EB	NB	WB	SB	Total
6:30 AM	0	0	0	2	2	6:30 AM	0	0	0	0	0	6:30 AM	0	0	0	0	0
6:35 AM	0	0	0	0	0	6:35 AM	0	0	0	0	0	6:35 AM	0	0	0	0	0
6:40 AM	0	0	0	2	2	6:40 AM	0	0	0	0	0	6:40 AM	1	0	0	0	1
6:45 AM	0	0	0	1	1	6:45 AM	0	0	0	0	0	6:45 AM	1	0	0	0	1
6:50 AM	0	1	0	2	3	6:50 AM	0	0	0	0	0	6:50 AM	0	0	0	0	0
6:55 AM	0	1	0	1	2	6:55 AM	0	0	0	0	0	6:55 AM	0	0	0	0	0
7:00 AM	0	1	0	1	2	7:00 AM	0	0	0	0	0	7:00 AM	0	0	0	0	0
7:05 AM	3	1	0	4	8	7:05 AM	0	0	0	0	0	7:05 AM	0	0	0	0	0
7:10 AM	0	1	0	5	6	7:10 AM	0	0	0	0	0	7:10 AM	1	0	0	0	1
7:15 AM	1	0	0	4	5	7:15 AM	0	0	0	0	0	7:15 AM	0	0	0	0	0
7:20 AM	0	3	2	1	6	7:20 AM	0	0	0	0	0	7:20 AM	0	0	0	0	0
7:25 AM	0	4	0	1	5	7:25 AM	0	0	0	0	0	7:25 AM	0	0	0	0	0
7:30 AM	1	1	0	4	6	7:30 AM	0	0	0	0	0	7:30 AM	0	0	0	0	0
7:35 AM	0	0	1	5	6	7:35 AM	0	0	0	0	0	7:35 AM	0	0	0	0	0
7:40 AM	0	1	0	1	2	7:40 AM	0	0	0	0	0	7:40 AM	0	0	0	0	0
7:45 AM	0	0	0	2	2	7:45 AM	0	0	0	0	0	7:45 AM	0	0	0	0	0
7:50 AM	0	0	1	2	3	7:50 AM	0	0	0	0	0	7:50 AM	1	0	0	0	1
7:55 AM	0	2	0	3	5	7:55 AM	0	0	0	0	0	7:55 AM	0	0	0	0	0
8:00 AM	0	2	0	1	3	8:00 AM	0	0	0	0	0	8:00 AM	0	0	1	0	1
8:05 AM	1	0	0	3	4	8:05 AM	0	0	0	0	0	8:05 AM	0	0	0	0	0
8:10 AM	0	1	0	1	2	8:10 AM	0	0	0	0	0	8:10 AM	0	0	0	0	0
8:15 AM	0	1	1	1	3	8:15 AM	0	0	0	0	0	8:15 AM	1	0	0	0	1
8:20 AM	0	3	1	1	5	8:20 AM	0	0	0	0	0	8:20 AM	0	0	0	0	0
8:25 AM	0	0	0	3	3	8:25 AM	0	0	0	0	0	8:25 AM	0	0	0	0	0
Count Total	6	23	6	51	86	Count Total	0	0	0	0	0	Count Total	5	0	1	0	6
Peak Hour	5	15	4	33	57	Peak Hour	0	0	0	0	0	Peak Hour	2	0	1	0	3

ALL TRAFFIC DATA SERVICES
(303) 216-2439
www.alltrafficdata.net

Location: 10 MAIN ST & 45TH ST AM
Date: Wednesday, November 30, 2022
Peak Hour: 07:25 AM - 08:25 AM
Peak 15-Minutes: 07:50 AM - 08:05 AM

Peak Hour

Motorized Vehicles

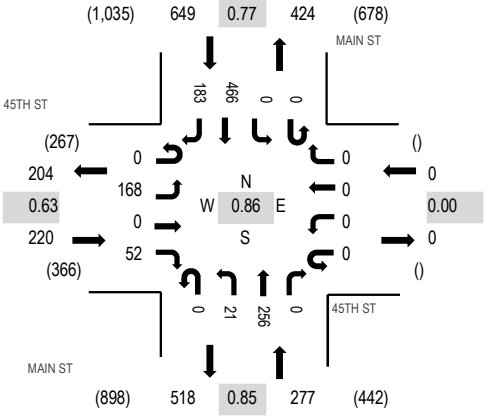

Heavy Vehicles

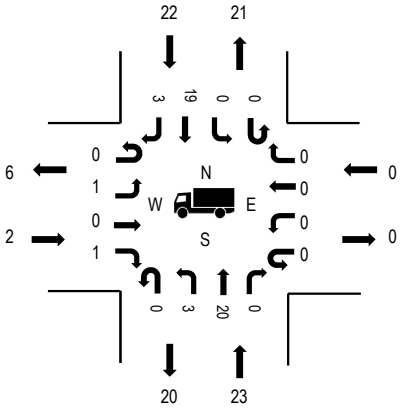

Pedestrians

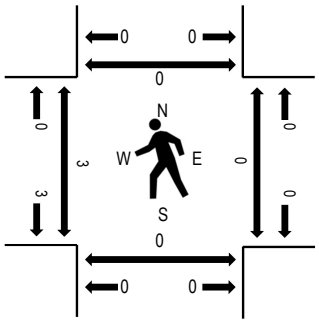

Note: Total study counts contained in parentheses.

	HV%	PHF
EB	0.9%	0.63
WB	0.0%	0.00
NB	8.3%	0.85
SB	3.4%	0.77
All	4.1%	0.86

Traffic Counts - Motorized Vehicles

Interval Start Time	45TH ST Eastbound				45TH ST Westbound				MAIN ST Northbound				MAIN ST Southbound				Total	Rolling Hour
	U-Turn	Left	Thru	Right	U-Turn	Left	Thru	Right	U-Turn	Left	Thru	Right	U-Turn	Left	Thru	Right		
6:30 AM	0	3	0	5	0	0	0	0	0	0	8	0	0	0	27	3	46	662
6:35 AM	0	4	0	2	0	0	0	0	0	1	13	0	0	0	31	6	57	684
6:40 AM	0	3	0	2	0	0	0	0	0	0	6	0	0	0	29	2	42	703
6:45 AM	0	5	0	1	0	0	0	0	0	1	12	0	0	0	34	2	55	745
6:50 AM	0	5	0	0	0	0	0	0	0	0	13	0	0	0	21	4	43	789
6:55 AM	0	4	0	6	0	0	0	0	0	0	15	0	0	0	21	4	50	860
7:00 AM	0	7	0	4	0	0	0	0	0	0	13	0	0	0	23	6	53	929
7:05 AM	0	8	0	7	0	0	0	0	0	0	11	0	0	0	21	6	53	976
7:10 AM	0	11	0	5	0	0	0	0	0	1	16	0	0	0	30	4	67	1,029
7:15 AM	0	12	0	5	0	0	0	0	0	1	15	0	0	0	31	3	67	1,070
7:20 AM	0	11	0	5	0	0	0	0	0	0	17	0	0	0	32	7	72	1,099
7:25 AM	0	7	0	4	0	0	0	0	0	1	10	0	0	0	30	5	57	1,146
7:30 AM	0	7	0	3	0	0	0	0	0	1	14	0	0	0	37	6	68	
7:35 AM	0	10	0	2	0	0	0	0	0	3	16	0	0	0	38	7	76	
7:40 AM	0	11	0	4	0	0	0	0	0	1	16	0	0	0	43	9	84	
7:45 AM	0	12	0	4	0	0	0	0	0	1	24	0	0	0	49	9	99	
7:50 AM	0	14	0	5	0	0	0	0	0	1	26	0	0	0	41	27	114	
7:55 AM	0	11	0	1	0	0	0	0	0	1	27	0	0	0	47	32	119	
8:00 AM	0	8	0	4	0	0	0	0	0	2	20	0	0	0	42	24	100	
8:05 AM	0	28	0	5	0	0	0	0	0	3	25	0	0	0	24	21	106	
8:10 AM	0	22	0	6	0	0	0	0	0	2	29	0	0	0	31	18	108	
8:15 AM	0	27	0	7	0	0	0	0	0	1	21	0	0	0	28	12	96	
8:20 AM	0	11	0	7	0	0	0	0	0	4	28	0	0	0	56	13	119	
8:25 AM	0	22	0	9	0	0	0	0	0	2	20	0	0	0	29	10	92	
Count Total	0	263	0	103	0	0	0	0	0	27	415	0	0	0	795	240	1,843	
Peak Hour	0	168	0	52	0	0	0	0	0	21	256	0	0	0	466	183	1,146	

Traffic Counts - Heavy Vehicles, Bicycles on Road, and Pedestrians/Bicycles on Crosswalk

Interval Start Time	Heavy Vehicles					Interval Start Time	Bicycles on Roadway					Interval Start Time	Pedestrians/Bicycles on Crosswalk				
	EB	NB	WB	SB	Total		EB	NB	WB	SB	Total		EB	NB	WB	SB	Total
6:30 AM	0	0	0	3	3	6:30 AM	0	0	0	0	0	6:30 AM	0	0	0	0	0
6:35 AM	0	1	0	2	3	6:35 AM	0	0	0	0	0	6:35 AM	2	0	0	0	2
6:40 AM	0	0	0	2	2	6:40 AM	0	0	0	0	0	6:40 AM	0	0	0	0	0
6:45 AM	0	0	0	1	1	6:45 AM	0	0	0	0	0	6:45 AM	0	0	0	0	0
6:50 AM	1	1	0	1	3	6:50 AM	0	0	0	0	0	6:50 AM	0	0	0	0	0
6:55 AM	0	1	0	0	1	6:55 AM	0	0	0	0	0	6:55 AM	0	0	0	0	0
7:00 AM	0	1	0	0	1	7:00 AM	0	0	0	0	0	7:00 AM	0	0	0	0	0
7:05 AM	1	1	0	3	5	7:05 AM	0	0	0	0	0	7:05 AM	1	0	0	0	1
7:10 AM	1	0	0	0	1	7:10 AM	0	0	0	0	0	7:10 AM	0	0	0	0	0
7:15 AM	1	0	0	1	2	7:15 AM	0	0	0	0	0	7:15 AM	0	0	0	0	0
7:20 AM	0	1	0	0	1	7:20 AM	0	0	0	0	0	7:20 AM	0	0	0	0	0
7:25 AM	1	3	0	0	4	7:25 AM	0	0	0	0	0	7:25 AM	0	0	0	0	0
7:30 AM	0	0	0	3	3	7:30 AM	0	0	0	0	0	7:30 AM	1	0	0	0	1
7:35 AM	0	1	0	3	4	7:35 AM	0	0	0	0	0	7:35 AM	0	0	0	0	0
7:40 AM	1	0	0	2	3	7:40 AM	0	0	0	0	0	7:40 AM	0	0	0	0	0
7:45 AM	0	1	0	2	3	7:45 AM	0	0	0	0	0	7:45 AM	0	0	0	0	0
7:50 AM	0	1	0	0	1	7:50 AM	0	0	0	0	0	7:50 AM	0	0	0	0	0
7:55 AM	0	5	0	2	7	7:55 AM	0	0	0	0	0	7:55 AM	0	0	0	0	0
8:00 AM	0	1	0	2	3	8:00 AM	0	0	0	0	0	8:00 AM	0	0	0	0	0
8:05 AM	0	2	0	2	4	8:05 AM	0	0	0	0	0	8:05 AM	1	0	0	0	1
8:10 AM	0	2	0	1	3	8:10 AM	0	0	0	0	0	8:10 AM	0	0	0	0	0
8:15 AM	0	3	0	3	6	8:15 AM	0	0	0	0	0	8:15 AM	0	0	0	0	0
8:20 AM	0	4	0	2	6	8:20 AM	0	0	0	0	0	8:20 AM	1	0	0	0	1
8:25 AM	1	0	0	1	2	8:25 AM	0	0	0	0	0	8:25 AM	0	0	0	0	0
Count Total	7	29	0	36	72	Count Total	0	0	0	0	0	Count Total	6	0	0	0	6
Peak Hour	2	23	0	22	47	Peak Hour	0	0	0	0	0	Peak Hour	3	0	0	0	3

ALL TRAFFIC DATA SERVICES
(303) 216-2439
www.alltrafficdata.net

Location: 11 MAIN ST & HAZEL DELL AVE AM
Date: Thursday, November 17, 2022
Peak Hour: 07:05 AM - 08:05 AM
Peak 15-Minutes: 07:40 AM - 07:55 AM

Peak Hour

Motorized Vehicles

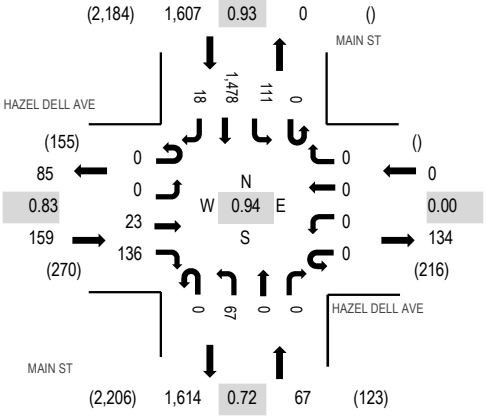

Note: Total study counts contained in parentheses.

	HV%	PHF
EB	6.3%	0.83
WB	0.0%	0.00
NB	10.4%	0.72
SB	2.2%	0.93
All	2.8%	0.94

Heavy Vehicles

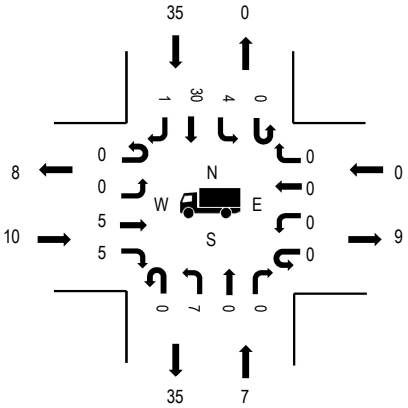

Pedestrians

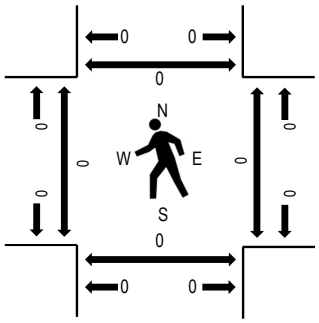

Traffic Counts - Motorized Vehicles

Interval Start Time	HAZEL DELL AVE Eastbound U-Turn	Left	Thru	Right	HAZEL DELL AVE Westbound U-Turn	Left	Thru	Right	MAIN ST Northbound U-Turn	Left	Thru	Right	MAIN ST Southbound U-Turn	Left	Thru	Right	Total	Rolling Hour
6:30 AM	0	0	0	4	0	0	0	0	0	1	0	0	0	7	22	0	34	1,094
6:35 AM	0	0	0	4	0	0	0	0	0	2	0	0	0	6	27	1	40	1,221
6:40 AM	0	0	0	9	0	0	0	0	0	1	0	0	0	7	20	0	37	1,331
6:45 AM	0	0	1	5	0	0	0	0	0	4	0	0	0	8	20	0	38	1,459
6:50 AM	0	0	2	5	0	0	0	0	0	4	0	0	0	10	32	0	53	1,583
6:55 AM	0	0	0	9	0	0	0	0	0	3	0	0	0	7	39	1	59	1,688
7:00 AM	0	0	0	8	0	0	0	0	0	2	0	0	0	3	80	0	93	1,773
7:05 AM	0	0	6	14	0	0	0	0	0	7	0	0	0	1	105	2	135	1,833
7:10 AM	0	0	4	10	0	0	0	0	0	1	0	0	0	13	124	1	153	1,805
7:15 AM	0	0	1	8	0	0	0	0	0	5	0	0	0	3	135	3	155	1,719
7:20 AM	0	0	1	8	0	0	0	0	0	6	0	0	0	13	119	1	148	1,644
7:25 AM	0	0	2	10	0	0	0	0	0	4	0	0	0	8	125	0	149	1,563
7:30 AM	0	0	1	11	0	0	0	0	0	5	0	0	0	8	133	3	161	
7:35 AM	0	0	1	10	0	0	0	0	0	7	0	0	0	7	125	0	150	
7:40 AM	0	0	2	9	0	0	0	0	0	2	0	0	0	19	131	2	165	
7:45 AM	0	0	2	11	0	0	0	0	0	5	0	0	0	13	130	1	162	
7:50 AM	0	0	1	16	0	0	0	0	0	5	0	0	0	10	125	1	158	
7:55 AM	0	0	2	14	0	0	0	0	0	9	0	0	0	8	108	3	144	
8:00 AM	0	0	0	15	0	0	0	0	0	11	0	0	0	8	118	1	153	
8:05 AM	0	0	1	12	0	0	0	0	0	5	0	0	0	6	81	2	107	
8:10 AM	0	0	0	13	0	0	0	0	0	5	0	0	0	7	41	1	67	
8:15 AM	0	0	2	11	0	0	0	0	0	10	0	0	0	5	48	4	80	
8:20 AM	0	0	0	10	0	0	0	0	0	8	0	0	0	1	47	1	67	
8:25 AM	0	0	1	14	0	0	0	0	0	11	0	0	0	8	31	4	69	
Count Total	0	0	30	240	0	0	0	0	0	123	0	0	0	186	1,966	32	2,577	
Peak Hour	0	0	23	136	0	0	0	0	0	67	0	0	0	111	1,478	18	1,833	

Traffic Counts - Heavy Vehicles, Bicycles on Road, and Pedestrians/Bicycles on Crosswalk

Interval Start Time	Heavy Vehicles					Interval Start Time	Bicycles on Roadway					Interval Start Time	Pedestrians/Bicycles on Crosswalk				
	EB	NB	WB	SB	Total		EB	NB	WB	SB	Total		EB	NB	WB	SB	Total
6:30 AM	0	0	0	1	1	6:30 AM	0	0	0	0	0	6:30 AM	0	0	0	0	0
6:35 AM	1	0	0	0	1	6:35 AM	0	0	0	0	0	6:35 AM	0	0	0	0	0
6:40 AM	1	0	0	0	1	6:40 AM	0	0	0	0	0	6:40 AM	0	0	0	0	0
6:45 AM	1	0	0	1	2	6:45 AM	0	0	0	0	0	6:45 AM	0	0	0	0	0
6:50 AM	0	2	0	3	5	6:50 AM	0	0	0	0	0	6:50 AM	0	0	0	0	0
6:55 AM	0	0	0	1	1	6:55 AM	0	0	0	0	0	6:55 AM	0	0	0	0	0
7:00 AM	1	0	0	2	3	7:00 AM	0	0	0	0	0	7:00 AM	0	0	0	0	0
7:05 AM	2	0	0	3	5	7:05 AM	0	0	0	0	0	7:05 AM	0	0	0	0	0
7:10 AM	1	0	0	7	8	7:10 AM	0	0	0	0	0	7:10 AM	0	0	0	0	0
7:15 AM	0	0	0	3	3	7:15 AM	0	0	0	0	0	7:15 AM	0	0	0	0	0
7:20 AM	0	1	0	2	3	7:20 AM	0	0	0	0	0	7:20 AM	0	0	0	0	0
7:25 AM	0	1	0	0	1	7:25 AM	0	0	0	0	0	7:25 AM	0	0	0	0	0
7:30 AM	2	2	0	5	9	7:30 AM	0	0	0	0	0	7:30 AM	0	0	0	0	0
7:35 AM	1	1	0	4	6	7:35 AM	0	0	0	0	0	7:35 AM	0	0	0	0	0
7:40 AM	0	0	0	2	2	7:40 AM	0	0	0	0	0	7:40 AM	0	0	0	0	0
7:45 AM	2	1	0	4	7	7:45 AM	0	0	0	0	0	7:45 AM	0	0	0	0	0
7:50 AM	1	0	0	2	3	7:50 AM	0	0	0	0	0	7:50 AM	0	0	0	0	0
7:55 AM	0	1	0	1	2	7:55 AM	0	0	0	0	0	7:55 AM	0	0	0	0	0
8:00 AM	1	0	0	2	3	8:00 AM	0	0	0	0	0	8:00 AM	0	0	0	0	0
8:05 AM	0	0	0	2	2	8:05 AM	0	0	0	0	0	8:05 AM	0	0	0	0	0
8:10 AM	0	0	0	1	1	8:10 AM	0	0	0	0	0	8:10 AM	0	0	0	0	0
8:15 AM	2	0	0	1	3	8:15 AM	0	0	0	0	0	8:15 AM	0	0	0	0	0
8:20 AM	0	1	0	2	3	8:20 AM	0	0	0	0	0	8:20 AM	0	0	0	0	0
8:25 AM	1	0	0	2	3	8:25 AM	0	0	0	0	0	8:25 AM	1	0	0	0	1
Count Total	17	10	0	51	78	Count Total	0	0	0	0	0	Count Total	1	0	0	0	1
Peak Hour	10	7	0	35	52	Peak Hour	0	0	0	0	0	Peak Hour	0	0	0	0	0

ALL TRAFFIC DATA SERVICES
(303) 216-2439
www.alltrafficdata.net

Location: 12 MAIN ST & I-5 SB OFFRAMP AM
Date: Thursday, November 17, 2022
Peak Hour: 07:05 AM - 08:05 AM
Peak 15-Minutes: 07:35 AM - 07:50 AM

Peak Hour

Motorized Vehicles

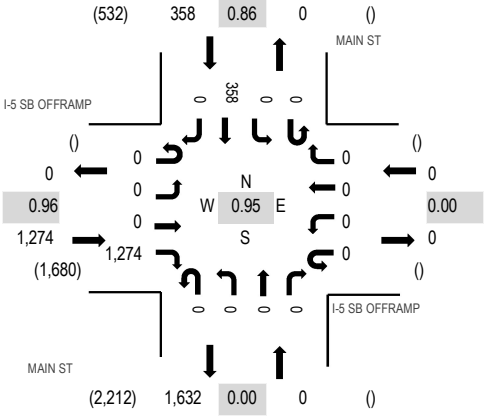

Heavy Vehicles

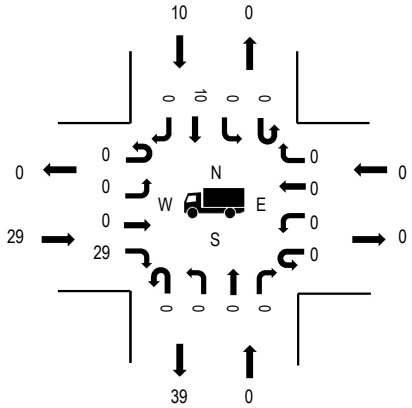

Pedestrians

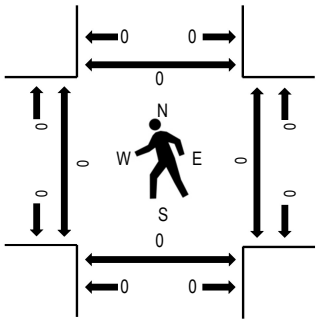

Note: Total study counts contained in parentheses.

	HV%	PHF
EB	2.3%	0.96
WB	0.0%	0.00
NB	0.0%	0.00
SB	2.8%	0.86
All	2.4%	0.95

Traffic Counts - Motorized Vehicles

Interval Start Time	I-5 SB OFFRAMP Eastbound				I-5 SB OFFRAMP Westbound				MAIN ST Northbound				MAIN ST Southbound					Rolling Hour
	U-Turn	Left	Thru	Right	U-Turn	Left	Thru	Right	U-Turn	Left	Thru	Right	U-Turn	Left	Thru	Right	Total	
6:30 AM	0	0	0	22	0	0	0	0	0	0	0	0	0	0	6	0	28	965
6:35 AM	0	0	0	21	0	0	0	0	0	0	0	0	0	0	13	0	34	1,075
6:40 AM	0	0	0	19	0	0	0	0	0	0	0	0	0	0	8	0	27	1,176
6:45 AM	0	0	0	24	0	0	0	0	0	0	0	0	0	0	6	0	30	1,299
6:50 AM	0	0	0	34	0	0	0	0	0	0	0	0	0	0	9	0	43	1,415
6:55 AM	0	0	0	40	0	0	0	0	0	0	0	0	0	0	6	0	46	1,507
7:00 AM	0	0	0	67	0	0	0	0	0	0	0	0	0	0	17	0	84	1,583
7:05 AM	0	0	0	99	0	0	0	0	0	0	0	0	0	0	24	0	123	1,632
7:10 AM	0	0	0	106	0	0	0	0	0	0	0	0	0	0	21	0	127	1,592
7:15 AM	0	0	0	108	0	0	0	0	0	0	0	0	0	0	36	0	144	1,508
7:20 AM	0	0	0	108	0	0	0	0	0	0	0	0	0	0	23	0	131	1,421
7:25 AM	0	0	0	116	0	0	0	0	0	0	0	0	0	0	32	0	148	1,344
7:30 AM	0	0	0	105	0	0	0	0	0	0	0	0	0	0	33	0	138	
7:35 AM	0	0	0	100	0	0	0	0	0	0	0	0	0	0	35	0	135	
7:40 AM	0	0	0	116	0	0	0	0	0	0	0	0	0	0	34	0	150	
7:45 AM	0	0	0	108	0	0	0	0	0	0	0	0	0	0	38	0	146	
7:50 AM	0	0	0	105	0	0	0	0	0	0	0	0	0	0	30	0	135	
7:55 AM	0	0	0	97	0	0	0	0	0	0	0	0	0	0	25	0	122	
8:00 AM	0	0	0	106	0	0	0	0	0	0	0	0	0	0	27	0	133	
8:05 AM	0	0	0	49	0	0	0	0	0	0	0	0	0	0	34	0	83	
8:10 AM	0	0	0	27	0	0	0	0	0	0	0	0	0	0	16	0	43	
8:15 AM	0	0	0	35	0	0	0	0	0	0	0	0	0	0	22	0	57	
8:20 AM	0	0	0	34	0	0	0	0	0	0	0	0	0	0	20	0	54	
8:25 AM	0	0	0	34	0	0	0	0	0	0	0	0	0	0	17	0	51	
Count Total	0	0	0	1,680	0	0	0	0	0	0	0	0	0	0	532	0	2,212	
Peak Hour	0	0	0	1,274	0	0	0	0	0	0	0	0	0	0	358	0	1,632	

Traffic Counts - Heavy Vehicles, Bicycles on Road, and Pedestrians/Bicycles on Crosswalk

Interval Start Time	Heavy Vehicles					Interval Start Time	Bicycles on Roadway					Interval Start Time	Pedestrians/Bicycles on Crosswalk				
	EB	NB	WB	SB	Total		EB	NB	WB	SB	Total		EB	NB	WB	SB	Total
6:30 AM	0	0	0	1	1	6:30 AM	0	0	0	0	0	6:30 AM	0	0	0	0	0
6:35 AM	0	0	0	1	1	6:35 AM	0	0	0	0	0	6:35 AM	0	0	0	0	0
6:40 AM	0	0	0	0	0	6:40 AM	0	0	0	0	0	6:40 AM	0	0	0	0	0
6:45 AM	0	0	0	1	1	6:45 AM	0	0	0	0	0	6:45 AM	0	0	0	0	0
6:50 AM	1	0	0	1	2	6:50 AM	0	0	0	0	0	6:50 AM	0	0	0	0	0
6:55 AM	1	0	0	0	1	6:55 AM	0	0	0	0	0	6:55 AM	0	0	0	0	0
7:00 AM	1	0	0	1	2	7:00 AM	0	0	0	0	0	7:00 AM	0	0	0	0	0
7:05 AM	4	0	0	0	4	7:05 AM	0	0	0	0	0	7:05 AM	0	0	0	0	0
7:10 AM	6	0	0	1	7	7:10 AM	0	0	0	0	0	7:10 AM	0	0	0	0	0
7:15 AM	1	0	0	1	2	7:15 AM	0	0	0	0	0	7:15 AM	0	0	0	0	0
7:20 AM	1	0	0	1	2	7:20 AM	0	0	0	0	0	7:20 AM	0	0	0	0	0
7:25 AM	0	0	0	0	0	7:25 AM	0	0	0	0	0	7:25 AM	0	0	0	0	0
7:30 AM	4	0	0	2	6	7:30 AM	0	0	0	0	0	7:30 AM	0	0	0	0	0
7:35 AM	5	0	0	1	6	7:35 AM	0	0	0	0	0	7:35 AM	0	0	0	0	0
7:40 AM	1	0	0	0	1	7:40 AM	0	0	0	0	0	7:40 AM	0	0	0	0	0
7:45 AM	1	0	0	2	3	7:45 AM	0	0	0	0	0	7:45 AM	0	0	0	0	0
7:50 AM	2	0	0	1	3	7:50 AM	0	0	0	0	0	7:50 AM	0	0	0	0	0
7:55 AM	1	0	0	0	1	7:55 AM	0	0	0	0	0	7:55 AM	0	0	0	0	0
8:00 AM	3	0	0	1	4	8:00 AM	0	0	0	0	0	8:00 AM	0	0	0	0	0
8:05 AM	0	0	0	0	0	8:05 AM	0	0	0	0	0	8:05 AM	0	0	0	0	0
8:10 AM	1	0	0	0	1	8:10 AM	0	0	0	0	0	8:10 AM	0	0	0	0	0
8:15 AM	1	0	0	1	2	8:15 AM	0	0	0	0	0	8:15 AM	0	0	0	0	0
8:20 AM	2	0	0	1	3	8:20 AM	0	0	0	0	0	8:20 AM	0	0	0	0	0
8:25 AM	2	0	0	0	2	8:25 AM	1	0	0	0	1	8:25 AM	0	0	0	0	0
Count Total	38	0	0	17	55	Count Total	1	0	0	0	1	Count Total	0	0	0	0	0
Peak Hour	29	0	0	10	39	Peak Hour	0	0	0	0	0	Peak Hour	0	0	0	0	0

ALL TRAFFIC DATA SERVICES
(303) 216-2439
www.alltrafficdata.net

Location: 5 MAIN ST & 29TH ST AM
Date: Thursday, November 17, 2022
Peak Hour: 07:05 AM - 08:05 AM
Peak 15-Minutes: 07:10 AM - 07:25 AM

Peak Hour - Motorized Vehicles

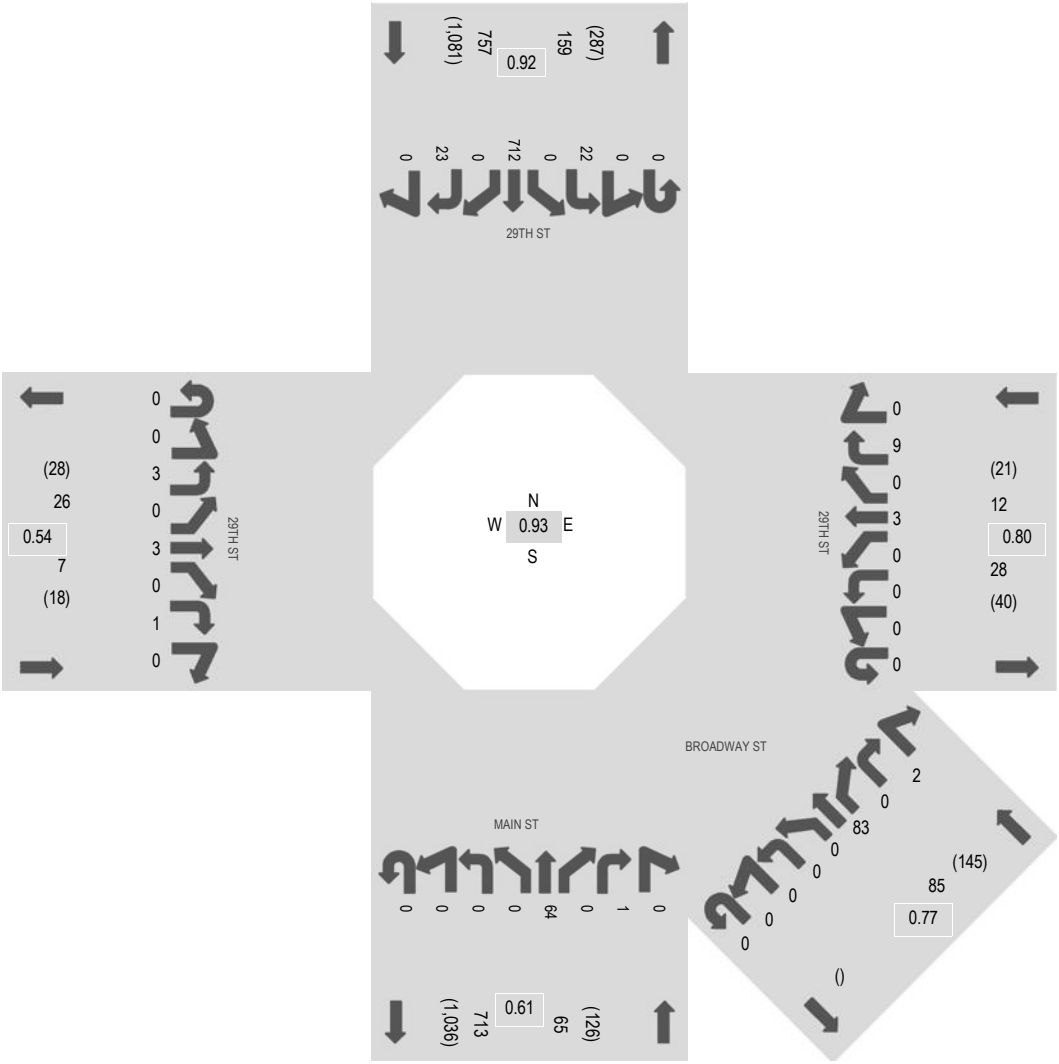

Note: Total study counts contained in parentheses.

Peak Hour - Pedestrians/Bicycles on Crosswalk

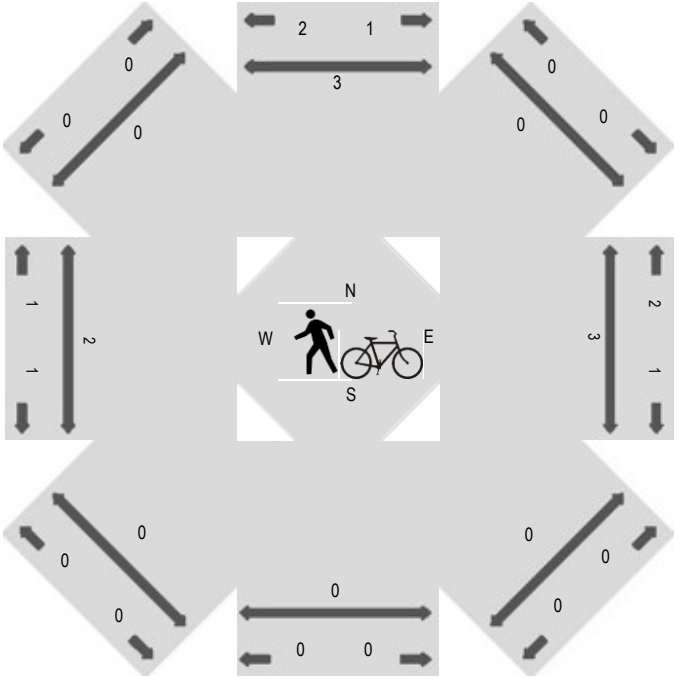

Peak Hour - Heavy Vehicles

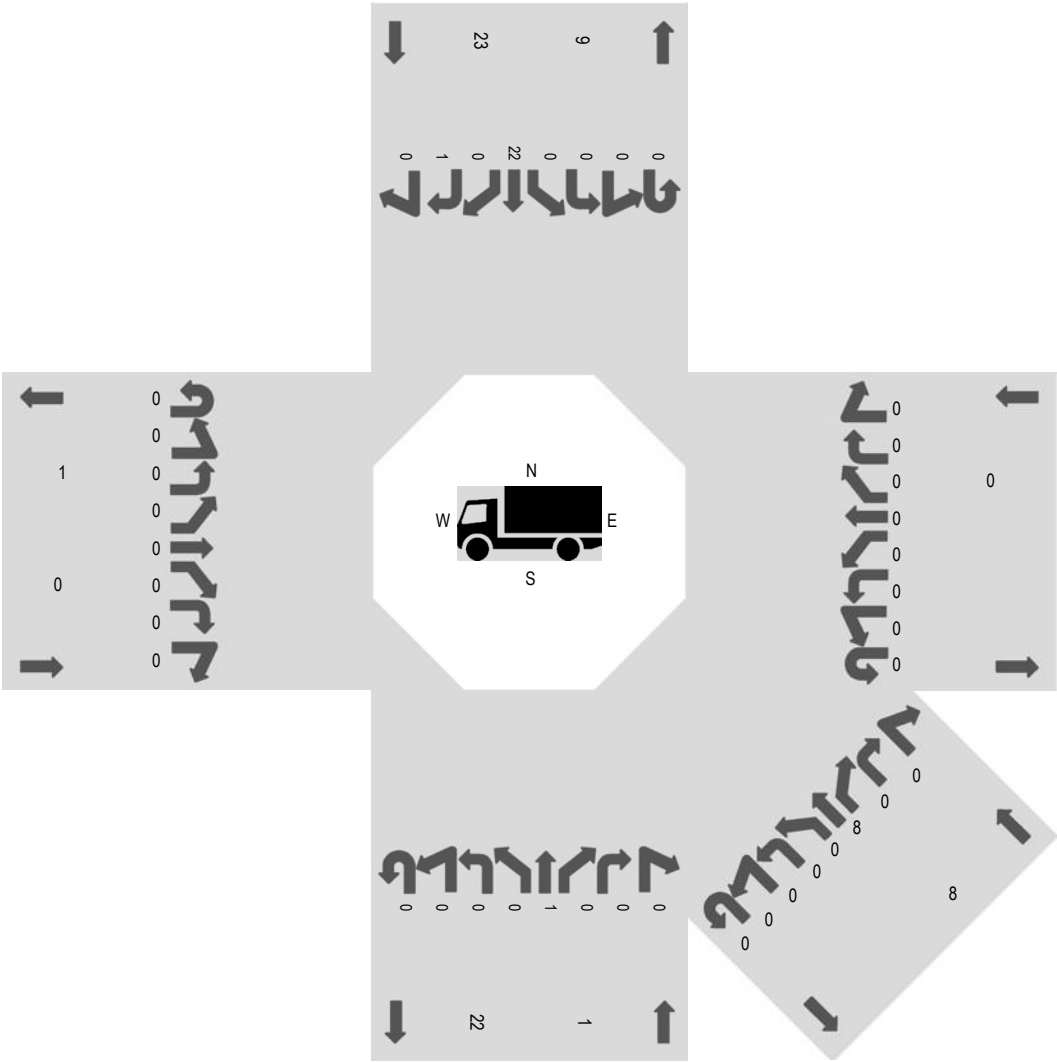
N
W
E
S
0 0 0 0 0 0 0 0
0 0 0 0 0 0 0 0
0 0 0 0 0 0 0 0

Traffic Counts - Motorized Vehicles

Interval Start Time	Westbound								Northwestbound								Northbound								Northeastbound							
	U	HL	L	BL	T	BR	R	HR	U	HL	L	BL	T	BR	R	HR	U	HL	L	BL	T	BR	R	HR	U	HL	L	BL	T	BR	R	HR
6:30 AM	0	0	0	0	0	0	0	0	0	0	0	0	0	2	0	0	0	0	0	0	4	0	0	0								
6:35 AM	0	0	0	0	0	0	0	0	0	0	0	0	0	3	0	0	0	0	0	0	2	0	0	0								
6:40 AM	0	0	0	0	0	0	0	0	0	0	0	0	0	3	0	0	0	0	0	0	4	0	0	0								
6:45 AM	0	0	0	0	0	0	0	0	0	0	0	0	0	4	0	0	0	0	0	0	2	0	0	0								
6:50 AM	0	0	0	0	0	0	0	0	0	0	0	0	0	1	0	1	0	0	0	0	1	0	0	0								
6:55 AM	0	0	0	0	0	0	0	0	0	0	0	0	0	2	0	0	0	0	0	0	1	0	0	0								
7:00 AM	0	0	0	0	1	0	1	0	0	0	0	0	0	6	0	0	0	0	0	0	1	0	0	0								
7:05 AM	0	0	0	0	0	0	0	0	0	0	0	0	0	4	0	0	0	0	0	0	5	0	0	0								
7:10 AM	0	0	0	0	0	0	1	0	0	0	0	0	0	8	0	0	0	0	0	0	8	0	0	0								
7:15 AM	0	0	0	0	0	0	1	0	0	0	0	0	0	7	0	1	0	0	0	0	5	0	0	0								
7:20 AM	0	0	0	0	0	0	1	0	0	0	0	0	0	2	0	0	0	0	0	0	10	0	0	0								
7:25 AM	0	0	0	0	0	0	0	0	0	0	0	0	0	10	0	0	0	0	0	0	3	0	0	0								
7:30 AM	0	0	0	0	1	0	0	0	0	0	0	0	0	5	0	0	0	0	0	0	3	0	0	0								
7:35 AM	0	0	0	0	1	0	0	0	0	0	0	0	0	6	0	0	0	0	0	0	4	0	0	0								
7:40 AM	0	0	0	0	0	0	1	0	0	0	0	0	0	7	0	0	0	0	0	0	3	0	0	0								
7:45 AM	0	0	0	0	0	0	1	0	0	0	0	0	0	8	0	1	0	0	0	0	6	0	1	0								
7:50 AM	0	0	0	0	1	0	1	0	0	0	0	0	0	8	0	0	0	0	0	0	4	0	0	0								
7:55 AM	0	0	0	0	0	0	2	0	0	0	0	0	0	13	0	0	0	0	0	0	4	0	0	0								
8:00 AM	0	0	0	0	0	0	1	0	0	0	0	0	0	5	0	0	0	0	0	0	9	0	0	0								
8:05 AM	0	0	0	0	1	0	1	0	0	0	0	0	0	6	0	0	0	0	0	0	8	0	0	0								
8:10 AM	0	0	0	0	0	0	1	0	0	0	0	0	0	9	0	0	0	0	0	0	5	0	0	0								
8:15 AM	0	0	0	0	0	0	0	0	0	0	0	0	0	9	0	0	0	0	0	0	11	0	0	0								
8:20 AM	0	0	1	0	0	0	1	0	0	0	0	0	0	5	0	0	0	0	0	0	7	0	0	0								
8:25 AM	0	0	0	0	0	0	2	0	0	0	0	0	0	8	0	1	0	0	0	0	15	0	0	0								
Count Total	0	0	1	0	5	0	15	0	0	0	0	0	0	141	0	4	0	0	0	0	125	0	1	0								
Peak Hour	0	0	0	0	3	0	9	0	0	0	0	0	0	83	0	2	0	0	0	0	64	0	1	0								

Traffic Counts - Motorized Vehicles (continued)

Interval Start Time	Eastbound								Southeastbound								Southbound								Southwestbound								Total	Rolling Hour
	U	HL	L	BL	T	BR	R	HR	U	HL	L	BL	T	BR	R	HR	U	HL	L	BL	T	BR	R	HR	U	HL	L	BL	T	BR	R	HR		
6:30 AM	0	0	0	0	0	0	1	0									0	0	0	0	13	0	0	0									20	615
6:35 AM	0	0	0	0	0	0	0	0									0	0	0	0	12	0	0	0									17	670
6:40 AM	0	0	0	0	0	0	0	0									0	0	0	0	7	0	0	0									14	721
6:45 AM	0	0	0	0	0	0	0	0									0	0	0	0	23	0	0	0									29	783
6:50 AM	0	0	0	0	0	0	0	0									0	0	0	0	29	0	0	0									32	832
6:55 AM	0	0	0	0	1	0	0	0									0	0	0	0	32	0	0	0									36	872
7:00 AM	0	0	1	0	0	0	0	0									0	0	0	0	48	0	0	0									58	914
7:05 AM	0	0	0	0	0	0	0	0									0	0	1	0	70	0	1	0									81	926
7:10 AM	0	0	0	0	0	0	0	0									0	0	0	0	62	0	1	0									80	901
7:15 AM	0	0	1	0	1	0	0	0									0	0	0	0	67	0	0	0									83	877
7:20 AM	0	0	0	0	0	0	0	0									0	0	2	0	70	0	1	0									86	838
7:25 AM	0	0	0	0	0	0	0	0									0	0	3	0	61	0	2	0									79	806
7:30 AM	0	0	1	0	0	0	1	0									0	0	1	0	61	0	2	0									75	776
7:35 AM	0	0	0	0	0	0	0	0									0	0	3	0	51	0	3	0									68	
7:40 AM	0	0	0	0	1	0	0	0									0	0	1	0	59	0	4	0									76	
7:45 AM	0	0	0	0	1	0	0	0									0	0	3	0	53	0	4	0									78	
7:50 AM	0	0	1	0	0	0	0	0									0	0	3	0	53	0	1	0									72	
7:55 AM	0	0	0	0	0	0	0	0									0	0	4	0	52	0	3	0									78	
8:00 AM	0	0	0	0	0	0	0	0									0	0	1	0	53	0	1	0									70	
8:05 AM	0	0	0	0	1	0	1	0									0	0	2	0	36	0	0	0									56	
8:10 AM	0	0	0	0	0	0	1	0									0	0	1	0	39	0	0	0									56	
8:15 AM	0	0	0	0	1	0	0	0									0	0	0	0	23	0	0	0									44	
8:20 AM	0	0	2	0	2	0	0	0									0	0	0	0	36	0	0	0									54	
8:25 AM	0	0	0	0	0	0	0	0									0	0	2	0	21	0	0	0									49	
Count Total	0	0	6	0	8	0	4	0									0	0	27	0	1,031	0	23	0									1,391	
Peak Hour	0	0	3	0	3	0	1	0									0	0	22	0	712	0	23	0									926	

Traffic Counts - Heavy Vehicles, Bicycles on Road, and Pedestrians/Bicycles on Crosswalk

Interval Start Time	Heavy Vehicles								
	WB	NWB	NB	NEB	EB	SEB	SB	SWB	Total
6:30 AM	0	0	0	0	0	0	1	0	1
6:35 AM	0	0	0	0	0	0	1	0	1
6:40 AM	0	0	2	0	0	0	1	0	3
6:45 AM	0	2	1	0	0	0	1	0	4
6:50 AM	0	1	0	0	0	0	1	0	2
6:55 AM	0	0	0	0	0	0	1	0	1
7:00 AM	0	0	0	0	0	0	0	0	0
7:05 AM	0	0	0	0	0	0	3	0	3
7:10 AM	0	0	1	0	0	0	0	0	1
7:15 AM	0	2	0	0	0	0	1	0	3
7:20 AM	0	0	0	0	0	0	2	0	2
7:25 AM	0	2	0	0	0	0	1	0	3
7:30 AM	0	0	0	0	0	0	1	0	1
7:35 AM	0	0	0	0	0	0	4	0	4
7:40 AM	0	1	0	0	0	0	1	0	2
7:45 AM	0	0	0	0	0	0	1	0	1
7:50 AM	0	1	0	0	0	0	2	0	3
7:55 AM	0	1	0	0	0	0	2	0	3
8:00 AM	0	1	0	0	0	0	5	0	6
8:05 AM	0	0	0	0	0	0	2	0	2
8:10 AM	0	1	0	0	0	0	0	0	1
8:15 AM	0	1	0	0	0	0	0	0	1
8:20 AM	0	1	0	0	0	0	1	0	2
8:25 AM	1	1	0	0	0	0	0	0	2
Count Total	1	15	4	0	0	0	32	0	52
Peak Hour	0	8	1	0	0	0	23	0	32

Interval Start Time	Bicycles on Roadway								
	WB	NWB	NB	NEB	EB	SEB	SB	SWB	Total
6:30 AM	0	0	0	0	0	0	0	0	0
6:35 AM	0	0	0	0	0	0	0	0	0
6:40 AM	0	0	0	0	0	0	0	0	0
6:45 AM	0	0	0	0	0	0	0	0	0
6:50 AM	1	0	0	0	0	0	0	0	1
6:55 AM	0	0	0	0	0	0	0	0	0
7:00 AM	0	0	0	0	0	0	0	0	0
7:05 AM	0	0	0	0	0	0	0	0	0
7:10 AM	0	0	0	0	0	0	0	0	0
7:15 AM	0	0	0	0	0	0	0	0	0
7:20 AM	1	0	0	0	0	0	0	0	1
7:25 AM	0	0	0	0	0	0	0	0	0
7:30 AM	0	0	0	0	0	0	0	0	0
7:35 AM	0	0	0	0	0	0	0	0	0
7:40 AM	0	0	0	0	0	0	0	0	0
7:45 AM	0	0	0	0	0	0	0	0	0
7:50 AM	0	0	0	0	0	0	0	0	0
7:55 AM	0	0	0	0	0	0	0	0	0
8:00 AM	0	0	0	0	0	0	0	0	0
8:05 AM	0	0	0	0	0	0	0	0	0
8:10 AM	0	0	0	0	0	0	0	0	0
8:15 AM	0	0	0	0	0	0	0	0	0
8:20 AM	0	0	0	0	0	0	0	0	0
8:25 AM	0	0	0	0	0	0	0	0	0
Count Total	2	0	0	0	0	0	0	0	2
Peak Hour	0	0	0	0	1	0	0	0	1

Interval Start Time	Pedestrians/Bicycles on Crosswalk								
	WB	NWB	NB	NEB	EB	SEB	SB	SWB	Total
6:30 AM	0	0	0	0	0	0	0	0	0
6:35 AM	0	0	0	0	0	0	0	0	0
6:40 AM	0	0	0	0	0	0	0	0	0
6:45 AM	0	0	0	0	0	0	0	0	0
6:50 AM	0	0	0	0	0	0	0	0	0
6:55 AM	1	0	0	0	0	0	0	0	1
7:00 AM	0	0	1	0	1	0	0	0	2
7:05 AM	1	0	0	0	0	0	0	0	1
7:10 AM	0	0	0	0	0	0	0	0	0
7:15 AM	0	0	0	0	1	0	0	0	1
7:20 AM	0	0	0	0	0	0	1	0	1
7:25 AM	0	0	0	0	1	0	1	0	2
7:30 AM	0	0	0	0	0	0	0	0	0
7:35 AM	0	0	0	0	0	0	0	0	0
7:40 AM	1	0	0	0	0	0	0	0	1
7:45 AM	0	0	0	0	0	0	0	0	0
7:50 AM	1	0	0	0	0	0	1	0	2
7:55 AM	0	0	0	0	0	0	0	0	0
8:00 AM	0	0	0	0	0	0	0	0	0
8:05 AM	0	0	0	0	0	0	0	0	0
8:10 AM	0	0	0	0	0	0	0	0	0
8:15 AM	0	0	0	0	0	0	0	0	0
8:20 AM	0	0	0	0	0	0	0	0	0
8:25 AM	0	0	0	0	0	0	0	0	0
Count Total	4	0	1	0	3	0	3	0	11
Peak Hour	3	0	0	0	2	0	3	0	8

ALL TRAFFIC DATA SERVICES
(303) 216-2439
www.alltrafficdata.net

Location: 1 BROADWAY ST & 4TH PLAIN BLVD PM
Date: Wednesday, November 16, 2022
Peak Hour: 04:05 PM - 05:05 PM
Peak 15-Minutes: 04:35 PM - 04:50 PM

Peak Hour

Motorized Vehicles

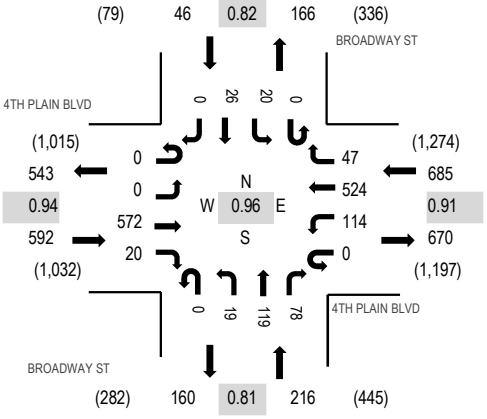

Heavy Vehicles

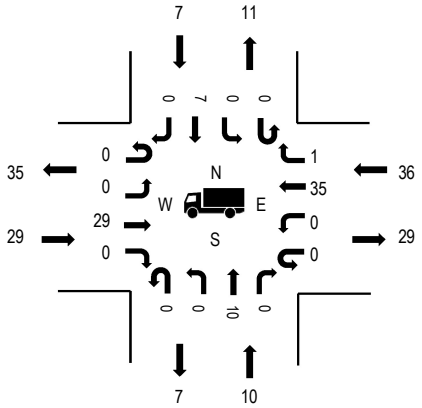

Pedestrians

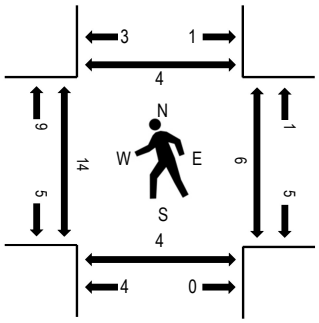

Note: Total study counts contained in parentheses.

	HV%	PHF
EB	4.9%	0.94
WB	5.3%	0.91
NB	4.6%	0.81
SB	15.2%	0.82
All	5.3%	0.96

Traffic Counts - Motorized Vehicles

Interval Start Time	4TH PLAIN BLVD Eastbound				4TH PLAIN BLVD Westbound				BROADWAY ST Northbound				BROADWAY ST Southbound				Total	Rolling Hour
	U-Turn	Left	Thru	Right	U-Turn	Left	Thru	Right	U-Turn	Left	Thru	Right	U-Turn	Left	Thru	Right		
4:00 PM	0	0	41	2	0	6	39	5	0	2	8	12	0	2	1	1	119	1,529
4:05 PM	0	0	58	1	0	12	49	3	0	2	12	3	0	0	2	0	142	1,539
4:10 PM	0	0	50	0	0	11	57	2	0	2	10	7	0	2	5	0	146	1,538
4:15 PM	0	0	38	2	0	10	36	5	0	0	10	6	0	3	3	0	113	1,519
4:20 PM	0	0	56	1	0	10	38	5	0	2	12	9	0	0	2	0	135	1,521
4:25 PM	0	0	44	1	0	8	50	4	0	2	5	3	0	1	3	0	121	1,500
4:30 PM	0	0	49	2	0	7	25	3	0	0	15	6	0	2	1	0	110	1,474
4:35 PM	0	0	51	4	0	9	46	2	0	2	8	4	0	3	1	0	130	1,466
4:40 PM	0	0	52	0	0	6	48	3	0	2	7	6	0	0	3	0	127	1,428
4:45 PM	0	0	49	2	0	7	51	9	0	2	12	11	0	2	0	0	145	1,395
4:50 PM	0	0	39	3	0	13	49	3	0	0	12	6	0	4	0	0	129	1,359
4:55 PM	0	0	38	1	0	11	34	6	0	2	11	5	0	1	3	0	112	1,321
5:00 PM	0	0	48	3	0	10	41	2	0	3	5	12	0	2	3	0	129	1,301
5:05 PM	0	0	43	0	0	8	48	3	0	2	18	14	0	2	3	0	141	
5:10 PM	0	0	43	3	0	11	35	7	0	4	14	4	0	2	4	0	127	
5:15 PM	0	0	39	0	0	10	35	8	0	2	13	7	0	0	1	0	115	
5:20 PM	0	0	39	2	0	5	42	3	0	0	13	8	0	0	2	0	114	
5:25 PM	0	0	30	0	0	6	35	3	0	1	10	8	0	1	1	0	95	
5:30 PM	0	0	35	0	0	11	36	2	0	1	8	9	0	0	0	0	102	
5:35 PM	0	0	24	1	0	6	36	4	0	3	7	11	0	0	0	0	92	
5:40 PM	0	0	38	1	0	6	36	2	0	0	4	2	0	1	3	1	94	
5:45 PM	0	0	29	1	0	6	45	5	0	2	11	7	0	0	2	1	109	
5:50 PM	0	0	33	1	0	3	30	5	0	2	10	4	0	1	2	0	91	
5:55 PM	0	0	33	2	0	11	33	3	0	0	4	4	0	1	1	0	92	
Count Total	0	0	999	33	0	203	974	97	0	38	239	168	0	30	46	3	2,830	
Peak Hour	0	0	572	20	0	114	524	47	0	19	119	78	0	20	26	0	1,539	

Traffic Counts - Heavy Vehicles, Bicycles on Road, and Pedestrians/Bicycles on Crosswalk

Interval Start Time	Heavy Vehicles					Interval Start Time	Bicycles on Roadway					Interval Start Time	Pedestrians/Bicycles on Crosswalk				
	EB	NB	WB	SB	Total		EB	NB	WB	SB	Total		EB	NB	WB	SB	Total
4:00 PM	4	1	6	0	11	4:00 PM	0	1	0	0	1	4:00 PM	2	0	0	1	3
4:05 PM	2	2	9	2	15	4:05 PM	0	0	0	0	0	4:05 PM	2	0	0	0	2
4:10 PM	1	2	4	0	7	4:10 PM	0	0	0	0	0	4:10 PM	0	0	2	1	3
4:15 PM	5	2	1	0	8	4:15 PM	0	0	1	0	1	4:15 PM	1	0	1	0	2
4:20 PM	3	0	5	0	8	4:20 PM	0	0	0	0	0	4:20 PM	0	1	0	1	2
4:25 PM	1	0	3	1	5	4:25 PM	0	0	0	0	0	4:25 PM	0	1	0	0	1
4:30 PM	3	1	1	0	5	4:30 PM	0	0	0	0	0	4:30 PM	5	0	0	2	7
4:35 PM	2	0	2	0	4	4:35 PM	0	0	0	0	0	4:35 PM	2	1	0	0	3
4:40 PM	2	0	3	2	7	4:40 PM	0	0	0	0	0	4:40 PM	0	0	0	0	0
4:45 PM	3	0	3	0	6	4:45 PM	0	0	0	0	0	4:45 PM	0	1	0	0	1
4:50 PM	4	1	0	0	5	4:50 PM	0	0	0	0	0	4:50 PM	2	0	0	0	2
4:55 PM	1	2	1	1	5	4:55 PM	0	0	0	0	0	4:55 PM	4	1	3	0	8
5:00 PM	2	0	4	1	7	5:00 PM	0	0	0	0	0	5:00 PM	0	0	0	0	0
5:05 PM	3	0	2	0	5	5:05 PM	0	0	0	0	0	5:05 PM	0	0	0	0	0
5:10 PM	1	1	2	1	5	5:10 PM	0	0	0	0	0	5:10 PM	2	0	0	0	2
5:15 PM	1	1	0	0	2	5:15 PM	0	0	0	0	0	5:15 PM	1	0	0	0	1
5:20 PM	3	1	1	1	6	5:20 PM	0	0	0	0	0	5:20 PM	0	0	0	0	0
5:25 PM	2	0	0	0	2	5:25 PM	0	0	0	0	0	5:25 PM	0	0	0	0	0
5:30 PM	0	0	2	0	2	5:30 PM	0	0	0	0	0	5:30 PM	0	1	0	0	1
5:35 PM	1	0	2	0	3	5:35 PM	0	0	0	0	0	5:35 PM	0	1	1	0	2
5:40 PM	1	1	2	2	6	5:40 PM	0	0	0	0	0	5:40 PM	0	2	1	0	3
5:45 PM	1	1	1	1	4	5:45 PM	0	0	0	0	0	5:45 PM	0	1	1	1	3
5:50 PM	2	0	1	0	3	5:50 PM	0	0	0	0	0	5:50 PM	0	0	0	0	0
5:55 PM	1	0	0	0	1	5:55 PM	0	0	0	0	0	5:55 PM	0	0	0	1	1
Count Total	49	16	55	12	132	Count Total	0	1	1	0	2	Count Total	21	10	9	7	47
Peak Hour	29	10	36	7	82	Peak Hour	0	0	1	0	1	Peak Hour	16	5	6	4	31

ALL TRAFFIC DATA SERVICES
(303) 216-2439
www.alltrafficdata.net

Location: 2 MAIN ST & 4TH PLAIN BLVD PM
Date: Wednesday, November 16, 2022
Peak Hour: 04:00 PM - 05:00 PM
Peak 15-Minutes: 04:05 PM - 04:20 PM

Peak Hour

Motorized Vehicles

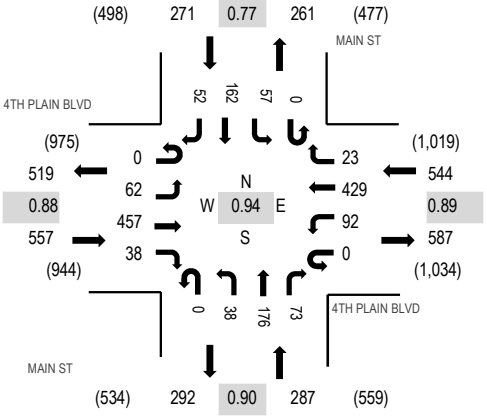

Heavy Vehicles

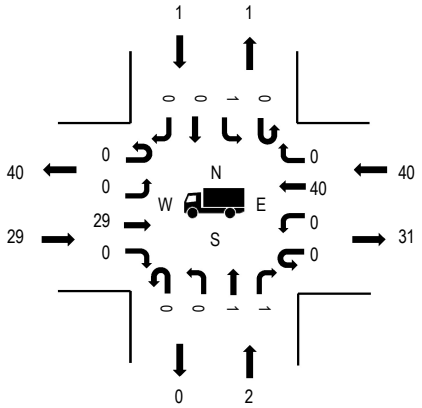

Pedestrians

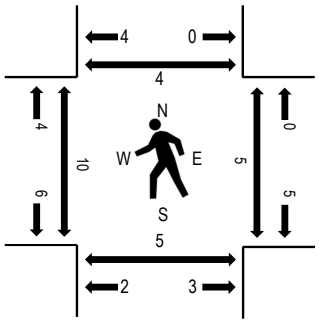

Note: Total study counts contained in parentheses.

	HV%	PHF
EB	5.2%	0.88
WB	7.4%	0.89
NB	0.7%	0.90
SB	0.4%	0.77
All	4.3%	0.94

Traffic Counts - Motorized Vehicles

Interval Start Time	4TH PLAIN BLVD Eastbound				4TH PLAIN BLVD Westbound				MAIN ST Northbound				MAIN ST Southbound					Rolling Hour
	U-Turn	Left	Thru	Right	U-Turn	Left	Thru	Right	U-Turn	Left	Thru	Right	U-Turn	Left	Thru	Right	Total	
4:00 PM	0	2	35	5	0	4	39	4	0	6	9	7	0	7	10	0	128	1,659
4:05 PM	0	14	43	2	0	7	38	0	0	0	14	4	0	6	9	4	141	1,658
4:10 PM	0	3	32	3	0	14	36	4	0	3	18	4	0	10	21	5	153	1,655
4:15 PM	0	7	39	6	0	9	30	2	0	5	17	4	0	4	23	3	149	1,649
4:20 PM	0	3	43	4	0	5	42	0	0	2	8	10	0	4	16	4	141	1,609
4:25 PM	0	3	26	1	0	4	39	3	0	2	16	8	0	2	15	3	122	1,584
4:30 PM	0	9	36	3	0	4	21	0	0	6	23	6	0	8	12	6	134	1,578
4:35 PM	0	5	51	2	0	6	41	2	0	2	15	9	0	5	8	11	157	1,555
4:40 PM	0	6	44	2	0	12	38	5	0	0	17	4	0	2	14	6	150	1,492
4:45 PM	0	1	34	2	0	9	33	0	0	7	17	6	0	3	12	4	128	1,432
4:50 PM	0	5	42	7	0	11	43	1	0	1	11	4	0	5	9	6	145	1,411
4:55 PM	0	4	32	1	0	7	29	2	0	4	11	7	0	1	13	0	111	1,374
5:00 PM	0	5	38	0	0	8	35	1	0	3	13	6	0	2	12	4	127	1,361
5:05 PM	0	8	23	0	0	6	35	2	0	3	22	14	0	5	16	4	138	
5:10 PM	0	5	43	3	0	5	31	3	0	5	15	6	0	4	22	5	147	
5:15 PM	0	3	30	1	0	10	26	6	0	1	13	7	0	5	4	3	109	
5:20 PM	0	5	21	2	0	10	27	1	0	4	17	6	0	6	13	4	116	
5:25 PM	0	1	22	6	0	5	28	4	0	3	16	9	0	2	13	7	116	
5:30 PM	0	6	23	2	0	6	36	1	0	5	7	10	0	1	11	3	111	
5:35 PM	0	5	20	4	0	3	33	1	0	3	2	7	0	0	13	3	94	
5:40 PM	0	2	24	2	0	3	27	2	0	2	9	10	0	1	3	5	90	
5:45 PM	0	1	24	0	0	7	32	0	0	4	11	9	0	2	11	6	107	
5:50 PM	0	3	24	3	0	13	31	1	0	2	3	10	0	5	10	3	108	
5:55 PM	0	5	22	1	0	5	28	3	0	0	14	1	0	5	9	5	98	
Count Total	0	111	771	62	0	173	798	48	0	73	318	168	0	95	299	104	3,020	
Peak Hour	0	62	457	38	0	92	429	23	0	38	176	73	0	57	162	52	1,659	

Traffic Counts - Heavy Vehicles, Bicycles on Road, and Pedestrians/Bicycles on Crosswalk

Interval Start Time	Heavy Vehicles					Interval Start Time	Bicycles on Roadway					Interval Start Time	Pedestrians/Bicycles on Crosswalk				
	EB	NB	WB	SB	Total		EB	NB	WB	SB	Total		EB	NB	WB	SB	Total
4:00 PM	5	0	7	0	12	4:00 PM	0	0	0	0	0	4:00 PM	0	0	0	0	0
4:05 PM	1	0	8	0	9	4:05 PM	0	0	0	0	0	4:05 PM	1	0	0	0	1
4:10 PM	1	0	4	0	5	4:10 PM	0	0	0	0	0	4:10 PM	0	0	0	0	0
4:15 PM	5	1	2	0	8	4:15 PM	0	0	0	0	0	4:15 PM	2	0	2	2	6
4:20 PM	3	0	4	0	7	4:20 PM	0	0	1	0	1	4:20 PM	0	0	0	0	0
4:25 PM	1	0	3	0	4	4:25 PM	0	0	0	0	0	4:25 PM	0	1	2	1	4
4:30 PM	3	0	1	0	4	4:30 PM	0	0	0	0	0	4:30 PM	0	0	0	1	1
4:35 PM	1	1	3	0	5	4:35 PM	0	0	0	0	0	4:35 PM	0	1	0	0	1
4:40 PM	2	0	3	0	5	4:40 PM	0	0	0	0	0	4:40 PM	2	1	1	0	4
4:45 PM	1	0	2	0	3	4:45 PM	0	0	0	0	0	4:45 PM	1	1	0	0	2
4:50 PM	5	0	2	1	8	4:50 PM	0	0	0	0	0	4:50 PM	1	0	0	0	1
4:55 PM	1	0	1	0	2	4:55 PM	0	0	0	1	1	4:55 PM	3	1	0	0	4
5:00 PM	2	0	3	0	5	5:00 PM	0	0	0	0	0	5:00 PM	0	0	0	0	0
5:05 PM	3	0	2	0	5	5:05 PM	0	0	1	0	1	5:05 PM	2	0	1	0	3
5:10 PM	0	0	0	0	0	5:10 PM	0	0	0	0	0	5:10 PM	1	0	2	0	3
5:15 PM	1	0	1	0	2	5:15 PM	0	0	0	0	0	5:15 PM	0	0	0	0	0
5:20 PM	2	1	1	0	4	5:20 PM	0	0	0	0	0	5:20 PM	0	0	0	0	0
5:25 PM	1	0	0	0	1	5:25 PM	0	0	0	0	0	5:25 PM	0	0	0	0	0
5:30 PM	0	0	3	0	3	5:30 PM	0	0	0	0	0	5:30 PM	1	1	0	0	2
5:35 PM	1	0	2	0	3	5:35 PM	0	0	0	0	0	5:35 PM	1	0	1	0	2
5:40 PM	1	0	2	0	3	5:40 PM	0	0	0	0	0	5:40 PM	1	2	1	1	5
5:45 PM	1	0	2	0	3	5:45 PM	0	0	0	1	1	5:45 PM	1	0	0	0	1
5:50 PM	1	0	1	1	3	5:50 PM	0	0	0	0	0	5:50 PM	0	1	0	0	1
5:55 PM	1	0	0	0	1	5:55 PM	0	0	0	0	0	5:55 PM	1	0	0	0	1
Count Total	43	3	57	2	105	Count Total	0	0	2	2	4	Count Total	18	9	10	5	42
Peak Hour	29	2	40	1	72	Peak Hour	0	0	1	1	2	Peak Hour	10	5	5	4	24

ALL TRAFFIC DATA SERVICES
(303) 216-2439
www.alltrafficdata.net

Location: 3 MAIN ST & 27TH ST PM
Date: Wednesday, November 16, 2022
Peak Hour: 04:05 PM - 05:05 PM
Peak 15-Minutes: 04:05 PM - 04:20 PM

Peak Hour

Motorized Vehicles

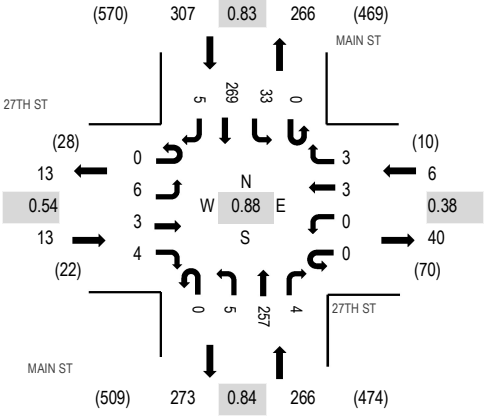

Heavy Vehicles

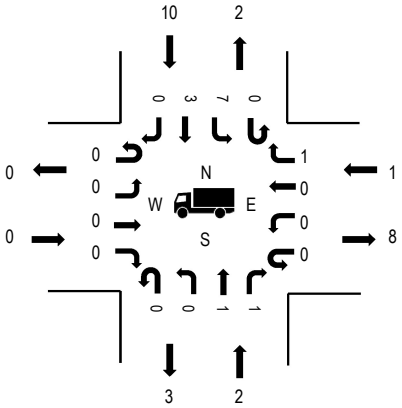

Pedestrians

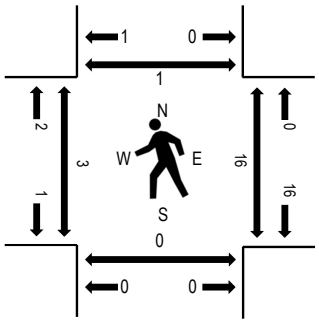

Note: Total study counts contained in parentheses.

	HV%	PHF
EB	0.0%	0.54
WB	16.7%	0.38
NB	0.8%	0.84
SB	3.3%	0.83
All	2.2%	0.88

Traffic Counts - Motorized Vehicles

Interval Start Time	27TH ST Eastbound				27TH ST Westbound				MAIN ST Northbound				MAIN ST Southbound				Total	Rolling Hour
	U-Turn	Left	Thru	Right	U-Turn	Left	Thru	Right	U-Turn	Left	Thru	Right	U-Turn	Left	Thru	Right		
4:00 PM	0	0	0	0	0	0	0	0	0	0	12	1	0	3	18	0	34	581
4:05 PM	0	0	0	1	0	0	0	1	0	0	29	0	0	2	24	1	58	592
4:10 PM	0	0	1	0	0	0	0	0	0	1	24	0	0	4	28	0	58	589
4:15 PM	0	0	0	0	0	0	0	0	0	0	18	1	0	4	29	0	52	589
4:20 PM	0	0	1	1	0	0	0	1	0	0	17	0	0	2	23	0	45	577
4:25 PM	0	1	0	0	0	0	0	0	0	1	20	0	0	4	25	0	51	580
4:30 PM	0	0	0	0	0	0	2	1	0	1	22	0	0	2	18	1	47	573
4:35 PM	0	0	0	0	0	0	0	0	0	1	29	0	0	3	29	0	62	560
4:40 PM	0	1	0	1	0	0	0	0	0	1	27	1	0	2	25	1	59	527
4:45 PM	0	1	0	1	0	0	1	0	0	0	18	0	0	3	13	1	38	501
4:50 PM	0	2	1	0	0	0	0	0	0	0	14	0	0	0	19	0	36	495
4:55 PM	0	0	0	0	0	0	0	0	0	0	21	1	0	2	16	1	41	492
5:00 PM	0	1	0	0	0	0	0	0	0	0	18	1	0	5	20	0	45	495
5:05 PM	0	0	0	1	0	0	1	0	0	0	26	1	0	4	22	0	55	
5:10 PM	0	0	0	0	0	0	0	0	0	1	25	0	0	3	28	1	58	
5:15 PM	0	0	0	1	0	0	0	0	0	1	20	0	0	1	17	0	40	
5:20 PM	0	3	1	0	0	0	0	0	0	1	23	0	0	2	17	1	48	
5:25 PM	0	0	0	1	0	0	0	0	0	1	19	1	0	1	20	1	44	
5:30 PM	0	0	0	0	0	0	0	1	0	0	12	0	0	1	18	2	34	
5:35 PM	0	0	0	0	0	0	0	0	0	1	9	0	0	0	19	0	29	
5:40 PM	0	0	0	0	0	0	0	1	0	1	12	0	0	3	16	0	33	
5:45 PM	0	0	0	0	0	0	0	0	0	1	7	1	0	2	20	1	32	
5:50 PM	0	1	1	0	0	0	0	1	0	1	9	0	0	2	18	0	33	
5:55 PM	0	0	0	0	0	0	0	0	0	0	22	0	0	2	20	0	44	
Count Total	0	10	5	7	0	0	4	6	0	13	453	8	0	57	502	11	1,076	
Peak Hour	0	6	3	4	0	0	3	3	0	5	257	4	0	33	269	5	592	

Traffic Counts - Heavy Vehicles, Bicycles on Road, and Pedestrians/Bicycles on Crosswalk

Interval Start Time	Heavy Vehicles					Interval Start Time	Bicycles on Roadway					Interval Start Time	Pedestrians/Bicycles on Crosswalk				
	EB	NB	WB	SB	Total		EB	NB	WB	SB	Total		EB	NB	WB	SB	Total
4:00 PM	0	0	0	1	1	4:00 PM	0	0	0	0	0	4:00 PM	2	0	1	1	4
4:05 PM	0	0	0	2	2	4:05 PM	0	0	0	0	0	4:05 PM	0	0	1	0	1
4:10 PM	0	0	0	0	0	4:10 PM	0	0	0	0	0	4:10 PM	0	0	2	0	2
4:15 PM	0	1	0	0	1	4:15 PM	0	0	0	0	0	4:15 PM	0	0	4	0	4
4:20 PM	0	0	1	1	2	4:20 PM	0	0	0	0	0	4:20 PM	0	0	7	0	7
4:25 PM	0	0	0	1	1	4:25 PM	0	0	0	0	0	4:25 PM	1	0	0	0	1
4:30 PM	0	0	0	0	0	4:30 PM	0	0	0	0	0	4:30 PM	0	0	1	0	1
4:35 PM	0	0	0	1	1	4:35 PM	0	0	0	0	0	4:35 PM	0	0	1	0	1
4:40 PM	0	0	0	2	2	4:40 PM	0	0	0	0	0	4:40 PM	0	0	0	0	0
4:45 PM	0	0	0	0	0	4:45 PM	0	0	0	0	0	4:45 PM	0	0	0	0	0
4:50 PM	0	0	0	1	1	4:50 PM	0	0	0	0	0	4:50 PM	0	0	0	0	0
4:55 PM	0	1	0	1	2	4:55 PM	0	0	0	1	1	4:55 PM	1	0	0	0	1
5:00 PM	0	0	0	1	1	5:00 PM	0	0	0	0	0	5:00 PM	1	0	1	1	3
5:05 PM	0	0	0	1	1	5:05 PM	0	0	0	0	0	5:05 PM	1	0	0	0	1
5:10 PM	0	0	0	0	0	5:10 PM	0	0	0	0	0	5:10 PM	1	0	0	0	1
5:15 PM	0	0	0	0	0	5:15 PM	0	0	0	0	0	5:15 PM	0	0	0	1	1
5:20 PM	0	1	0	1	2	5:20 PM	0	0	0	0	0	5:20 PM	0	0	0	0	0
5:25 PM	0	0	0	0	0	5:25 PM	0	0	0	0	0	5:25 PM	0	0	0	0	0
5:30 PM	0	0	0	0	0	5:30 PM	0	0	0	0	0	5:30 PM	0	0	0	0	0
5:35 PM	0	0	0	0	0	5:35 PM	0	0	0	0	0	5:35 PM	0	0	2	1	3
5:40 PM	0	0	0	2	2	5:40 PM	0	0	0	0	0	5:40 PM	0	0	1	0	1
5:45 PM	0	0	0	1	1	5:45 PM	0	0	0	1	1	5:45 PM	1	0	0	0	1
5:50 PM	0	0	0	1	1	5:50 PM	0	0	0	0	0	5:50 PM	0	0	0	0	0
5:55 PM	0	0	0	0	0	5:55 PM	0	0	0	0	0	5:55 PM	0	0	0	0	0
Count Total	0	3	1	17	21	Count Total	0	0	0	2	2	Count Total	8	0	21	4	33
Peak Hour	0	2	1	10	13	Peak Hour	0	0	0	1	1	Peak Hour	3	0	17	1	21

ALL TRAFFIC DATA SERVICES
(303) 216-2439
www.alltrafficdata.net

Location: 4 MAIN ST & 28TH ST PM
Date: Wednesday, November 16, 2022
Peak Hour: 04:10 PM - 05:10 PM
Peak 15-Minutes: 04:25 PM - 04:40 PM

Peak Hour

Motorized Vehicles

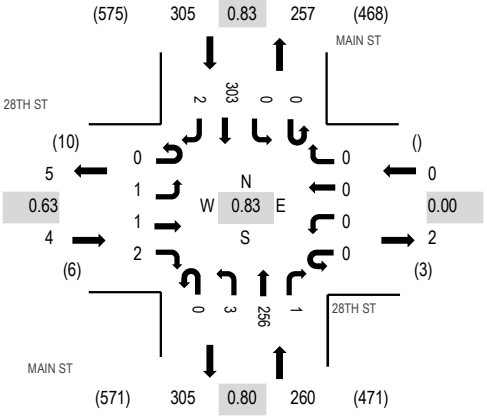

Note: Total study counts contained in parentheses.

	HV%	PHF
EB	0.0%	0.63
WB	0.0%	0.00
NB	0.8%	0.80
SB	3.0%	0.83
All	1.9%	0.83

Heavy Vehicles

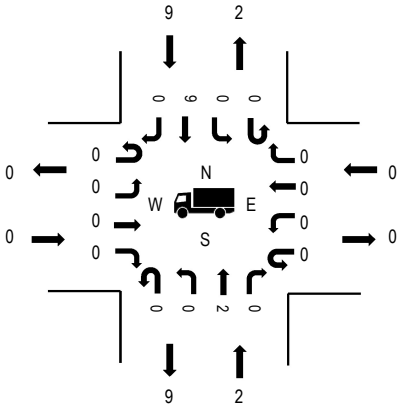

Pedestrians

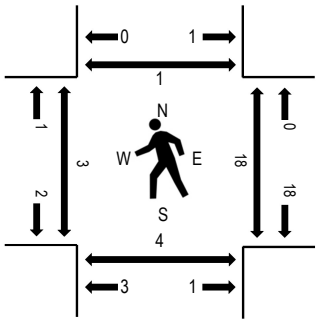

Traffic Counts - Motorized Vehicles

Interval Start Time	28TH ST Eastbound U-Turn	Left	Thru	Right	28TH ST Westbound U-Turn	Left	Thru	Right	MAIN ST Northbound U-Turn	Left	Thru	Right	MAIN ST Southbound U-Turn	Left	Thru	Right	Total	Rolling Hour
4:00 PM	0	0	0	0	0	0	0	0	0	0	17	0	0	0	25	0	42	562
4:05 PM	0	0	0	0	0	0	0	0	0	1	25	0	0	0	24	0	50	561
4:10 PM	0	0	0	0	0	0	0	0	0	1	20	0	0	0	37	0	58	569
4:15 PM	0	0	0	1	0	0	0	0	0	1	25	0	0	0	34	0	61	565
4:20 PM	0	0	0	0	0	0	0	0	0	0	13	0	0	0	14	0	27	554
4:25 PM	0	0	0	0	0	0	0	0	0	0	19	0	0	0	31	0	50	568
4:30 PM	0	0	0	0	0	0	0	0	0	0	32	0	0	0	25	0	57	558
4:35 PM	0	0	0	0	0	0	0	0	0	0	29	0	0	0	35	1	65	538
4:40 PM	0	0	0	0	0	0	0	0	0	1	23	0	0	0	23	0	47	501
4:45 PM	0	0	0	1	0	0	0	0	0	0	11	0	0	0	15	0	27	485
4:50 PM	0	0	0	0	0	0	0	0	0	0	20	0	0	0	21	0	41	493
4:55 PM	0	0	1	0	0	0	0	0	0	0	23	0	0	0	13	0	37	478
5:00 PM	0	0	0	0	0	0	0	0	0	0	13	0	0	0	28	0	41	490
5:05 PM	0	1	0	0	0	0	0	0	0	0	28	1	0	0	27	1	58	
5:10 PM	0	1	0	0	0	0	0	0	0	0	23	0	0	0	30	0	54	
5:15 PM	0	0	0	0	0	0	0	0	0	0	30	0	0	0	17	3	50	
5:20 PM	0	1	0	0	0	0	0	0	0	1	17	0	0	0	22	0	41	
5:25 PM	0	0	0	0	0	0	0	0	0	0	16	0	0	0	24	0	40	
5:30 PM	0	0	0	0	0	0	0	0	0	0	17	0	0	0	20	0	37	
5:35 PM	0	0	0	0	0	0	0	0	0	0	12	0	0	0	16	0	28	
5:40 PM	0	0	0	0	0	0	0	0	0	0	9	0	0	1	21	0	31	
5:45 PM	0	0	0	0	0	0	0	0	0	0	8	0	0	0	27	0	35	
5:50 PM	0	0	0	0	0	0	0	0	0	0	13	0	0	0	13	0	26	
5:55 PM	0	0	0	0	0	0	0	0	0	0	22	0	0	0	27	0	49	
Count Total	0	3	1	2	0	0	0	0	0	5	465	1	0	1	569	5	1,052	
Peak Hour	0	1	1	2	0	0	0	0	0	3	256	1	0	0	303	2	569	

Traffic Counts - Heavy Vehicles, Bicycles on Road, and Pedestrians/Bicycles on Crosswalk

Interval Start Time	Heavy Vehicles					Interval Start Time	Bicycles on Roadway					Interval Start Time	Pedestrians/Bicycles on Crosswalk				
	EB	NB	WB	SB	Total		EB	NB	WB	SB	Total		EB	NB	WB	SB	Total
4:00 PM	0	0	0	3	3	4:00 PM	0	0	0	0	0	4:00 PM	1	0	1	0	2
4:05 PM	0	0	0	0	0	4:05 PM	0	0	0	0	0	4:05 PM	0	0	2	0	2
4:10 PM	0	0	0	0	0	4:10 PM	0	0	0	0	0	4:10 PM	0	2	8	0	10
4:15 PM	0	2	0	0	2	4:15 PM	0	0	0	0	0	4:15 PM	0	0	8	0	8
4:20 PM	0	0	0	1	1	4:20 PM	0	0	0	0	0	4:20 PM	1	0	1	0	2
4:25 PM	0	0	0	1	1	4:25 PM	0	0	0	0	0	4:25 PM	0	0	1	0	1
4:30 PM	0	0	0	1	1	4:30 PM	0	0	0	0	0	4:30 PM	1	1	0	0	2
4:35 PM	0	0	0	2	2	4:35 PM	0	0	0	0	0	4:35 PM	0	0	0	0	0
4:40 PM	0	0	0	0	0	4:40 PM	0	0	0	0	0	4:40 PM	0	0	0	0	0
4:45 PM	0	0	0	0	0	4:45 PM	0	0	0	0	0	4:45 PM	0	0	0	0	0
4:50 PM	0	0	0	2	2	4:50 PM	0	0	0	0	0	4:50 PM	0	1	0	0	1
4:55 PM	0	0	0	0	0	4:55 PM	0	0	0	1	1	4:55 PM	0	0	0	0	0
5:00 PM	0	0	0	1	1	5:00 PM	0	0	0	0	0	5:00 PM	1	0	0	0	1
5:05 PM	0	0	0	1	1	5:05 PM	0	0	0	0	0	5:05 PM	0	0	2	1	3
5:10 PM	0	0	0	0	0	5:10 PM	0	0	0	0	0	5:10 PM	1	0	0	0	1
5:15 PM	0	1	0	0	1	5:15 PM	0	0	0	0	0	5:15 PM	0	0	0	0	0
5:20 PM	0	0	0	1	1	5:20 PM	0	0	0	0	0	5:20 PM	0	0	0	0	0
5:25 PM	0	0	0	0	0	5:25 PM	0	0	0	0	0	5:25 PM	0	0	0	0	0
5:30 PM	0	0	0	0	0	5:30 PM	0	0	0	0	0	5:30 PM	0	0	0	0	0
5:35 PM	0	0	0	0	0	5:35 PM	0	0	0	0	0	5:35 PM	1	0	1	0	2
5:40 PM	0	0	0	2	2	5:40 PM	0	0	0	0	0	5:40 PM	1	0	0	0	1
5:45 PM	0	0	0	2	2	5:45 PM	0	0	0	1	1	5:45 PM	0	0	0	0	0
5:50 PM	0	0	0	0	0	5:50 PM	0	0	0	0	0	5:50 PM	0	0	0	0	0
5:55 PM	0	0	0	0	0	5:55 PM	0	0	0	0	0	5:55 PM	0	0	0	0	0
Count Total	0	3	0	17	20	Count Total	0	0	0	2	2	Count Total	7	4	24	1	36
Peak Hour	0	2	0	9	11	Peak Hour	0	0	0	1	1	Peak Hour	3	4	20	1	28

ALL TRAFFIC DATA SERVICES
(303) 216-2439
www.alltrafficdata.net

Location: 6 MAIN ST & 33RD ST PM
Date: Wednesday, November 16, 2022
Peak Hour: 04:00 PM - 05:00 PM
Peak 15-Minutes: 04:05 PM - 04:20 PM

Peak Hour

Motorized Vehicles

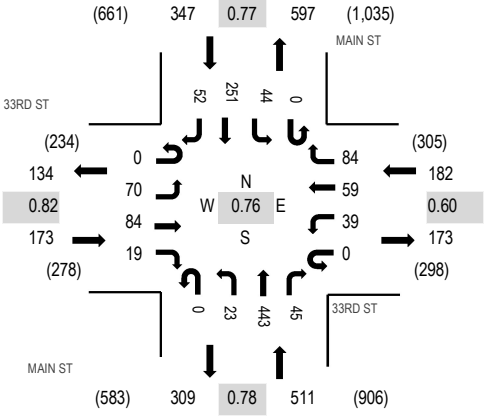

Heavy Vehicles

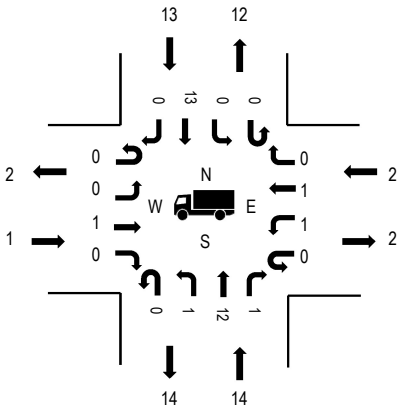

Pedestrians

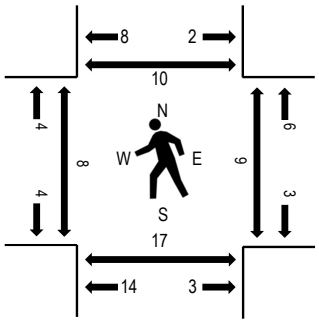

Note: Total study counts contained in parentheses.

	HV%	PHF
EB	0.6%	0.82
WB	1.1%	0.60
NB	2.7%	0.78
SB	3.7%	0.77
All	2.5%	0.76

Traffic Counts - Motorized Vehicles

Interval Start Time	33RD ST Eastbound				33RD ST Westbound				MAIN ST Northbound				MAIN ST Southbound				Total	Rolling Hour
	U-Turn	Left	Thru	Right	U-Turn	Left	Thru	Right	U-Turn	Left	Thru	Right	U-Turn	Left	Thru	Right		
4:00 PM	0	3	9	5	0	4	4	7	0	2	27	4	0	5	26	3	99	1,213
4:05 PM	0	5	12	1	0	5	5	7	0	3	47	6	0	6	29	6	132	1,195
4:10 PM	0	5	9	4	0	6	15	18	0	2	47	1	0	11	22	3	143	1,166
4:15 PM	0	6	6	1	0	4	2	14	0	0	56	2	0	3	27	5	126	1,132
4:20 PM	0	5	7	2	0	2	5	8	0	5	37	3	0	2	17	1	94	1,097
4:25 PM	0	4	6	0	0	2	5	6	0	3	34	0	0	1	29	5	95	1,092
4:30 PM	0	6	3	0	0	4	3	5	0	1	43	5	0	2	18	4	94	1,079
4:35 PM	0	5	4	2	0	6	5	3	0	0	31	7	0	4	27	7	101	1,055
4:40 PM	0	10	12	0	0	2	3	2	0	2	30	8	0	3	18	5	95	1,007
4:45 PM	0	10	6	1	0	1	5	5	0	2	31	2	0	4	11	6	84	967
4:50 PM	0	8	3	2	0	1	4	6	0	1	26	3	0	3	14	3	74	947
4:55 PM	0	3	7	1	0	2	3	3	0	2	34	4	0	0	13	4	76	936
5:00 PM	0	6	6	3	0	3	4	1	0	0	31	4	0	4	18	1	81	937
5:05 PM	0	4	8	1	0	3	6	6	0	1	40	2	0	4	25	3	103	
5:10 PM	0	2	10	2	0	1	8	5	0	1	50	8	0	0	17	5	109	
5:15 PM	0	4	5	1	0	2	5	3	0	1	37	6	0	6	20	1	91	
5:20 PM	0	3	5	2	0	3	3	10	0	0	41	2	0	2	14	4	89	
5:25 PM	0	6	6	0	0	3	5	3	0	2	25	1	0	3	24	4	82	
5:30 PM	0	2	6	1	0	1	1	4	0	0	27	3	0	2	19	4	70	
5:35 PM	0	3	2	1	0	4	2	3	0	0	18	2	0	1	12	5	53	
5:40 PM	0	2	1	0	0	1	1	3	0	0	16	3	0	4	19	5	55	
5:45 PM	0	1	2	0	0	1	5	3	0	0	14	3	0	3	28	4	64	
5:50 PM	0	3	2	1	0	3	4	2	0	2	22	0	0	2	17	5	63	
5:55 PM	0	1	3	0	0	1	5	5	0	0	32	1	0	3	23	3	77	
Count Total	0	107	140	31	0	65	108	132	0	30	796	80	0	78	487	96	2,150	
Peak Hour	0	70	84	19	0	39	59	84	0	23	443	45	0	44	251	52	1,213	

Traffic Counts - Heavy Vehicles, Bicycles on Road, and Pedestrians/Bicycles on Crosswalk

Interval Start Time	Heavy Vehicles					Interval Start Time	Bicycles on Roadway					Interval Start Time	Pedestrians/Bicycles on Crosswalk				
	EB	NB	WB	SB	Total		EB	NB	WB	SB	Total		EB	NB	WB	SB	Total
4:00 PM	1	2	0	3	6	4:00 PM	0	0	0	0	0	4:00 PM	0	0	0	0	0
4:05 PM	0	1	1	2	4	4:05 PM	0	0	0	0	0	4:05 PM	0	3	3	2	8
4:10 PM	0	2	0	0	2	4:10 PM	0	0	0	0	0	4:10 PM	2	8	2	2	14
4:15 PM	0	2	1	2	5	4:15 PM	0	0	0	0	0	4:15 PM	0	3	1	3	7
4:20 PM	0	1	0	1	2	4:20 PM	0	0	0	0	0	4:20 PM	1	0	2	2	5
4:25 PM	0	0	0	0	0	4:25 PM	0	0	0	0	0	4:25 PM	0	0	0	0	0
4:30 PM	0	2	0	2	4	4:30 PM	0	0	0	0	0	4:30 PM	0	0	0	0	0
4:35 PM	0	0	0	2	2	4:35 PM	0	0	0	0	0	4:35 PM	0	0	0	0	0
4:40 PM	0	0	0	0	0	4:40 PM	0	0	0	0	0	4:40 PM	0	0	0	0	0
4:45 PM	0	0	0	0	0	4:45 PM	1	0	0	0	1	4:45 PM	1	1	0	0	2
4:50 PM	0	1	0	1	2	4:50 PM	0	0	0	1	1	4:50 PM	1	0	1	0	2
4:55 PM	0	3	0	0	3	4:55 PM	0	0	0	0	0	4:55 PM	3	2	0	1	6
5:00 PM	0	0	0	2	2	5:00 PM	0	0	0	0	0	5:00 PM	0	0	0	1	1
5:05 PM	0	0	0	1	1	5:05 PM	0	0	0	0	0	5:05 PM	0	0	2	0	2
5:10 PM	0	1	0	0	1	5:10 PM	0	0	0	0	0	5:10 PM	0	0	0	0	0
5:15 PM	0	1	0	0	1	5:15 PM	0	0	0	0	0	5:15 PM	0	0	0	0	0
5:20 PM	0	2	0	1	3	5:20 PM	1	0	0	0	1	5:20 PM	0	0	0	0	0
5:25 PM	0	0	0	0	0	5:25 PM	0	0	0	0	0	5:25 PM	0	0	1	2	3
5:30 PM	0	0	0	0	0	5:30 PM	0	0	0	0	0	5:30 PM	0	0	0	0	0
5:35 PM	0	0	0	0	0	5:35 PM	0	0	0	0	0	5:35 PM	1	0	0	0	1
5:40 PM	0	1	0	2	3	5:40 PM	0	0	0	1	1	5:40 PM	0	3	2	1	6
5:45 PM	0	0	0	1	1	5:45 PM	0	0	0	0	0	5:45 PM	0	0	0	0	0
5:50 PM	0	1	0	0	1	5:50 PM	0	0	1	0	1	5:50 PM	0	0	0	0	0
5:55 PM	0	0	0	0	0	5:55 PM	0	0	0	0	0	5:55 PM	0	0	0	0	0
Count Total	1	20	2	20	43	Count Total	2	0	1	2	5	Count Total	9	20	14	14	57
Peak Hour	1	14	2	13	30	Peak Hour	1	0	0	1	2	Peak Hour	8	17	9	10	44

ALL TRAFFIC DATA SERVICES
(303) 216-2439
www.alltrafficdata.net

Location: 7 MAIN ST & 37TH ST PM
Date: Wednesday, November 16, 2022
Peak Hour: 04:10 PM - 05:10 PM
Peak 15-Minutes: 04:10 PM - 04:25 PM

Peak Hour

Motorized Vehicles

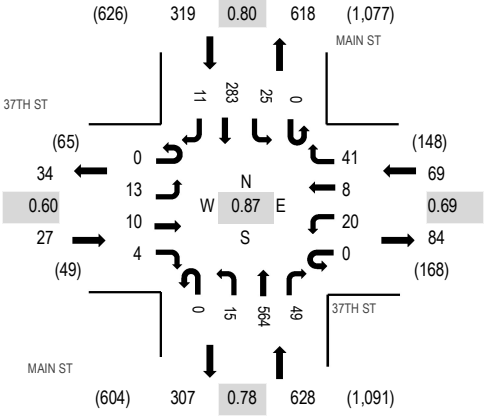

Heavy Vehicles

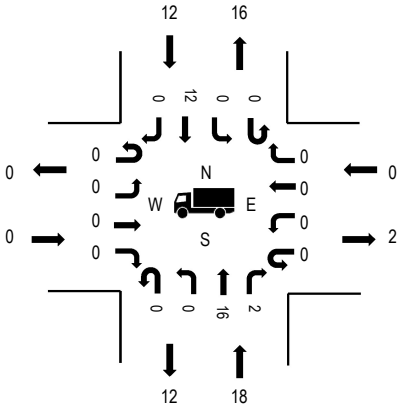

Pedestrians

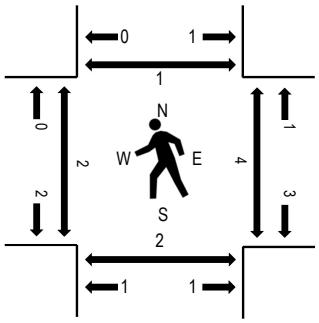

Note: Total study counts contained in parentheses.

	HV%	PHF
EB	0.0%	0.60
WB	0.0%	0.69
NB	2.9%	0.78
SB	3.8%	0.80
All	2.9%	0.87

Traffic Counts - Motorized Vehicles

Interval Start Time	37TH ST Eastbound				37TH ST Westbound				MAIN ST Northbound				MAIN ST Southbound				Total	Rolling Hour
	U-Turn	Left	Thru	Right	U-Turn	Left	Thru	Right	U-Turn	Left	Thru	Right	U-Turn	Left	Thru	Right		
4:00 PM	0	0	0	0	0	0	2	5	0	0	36	5	0	0	24	1	73	1,034
4:05 PM	0	0	0	1	0	1	1	4	0	0	43	0	0	1	31	1	83	1,035
4:10 PM	0	0	0	0	0	1	0	3	0	2	72	5	0	2	17	1	103	1,043
4:15 PM	0	1	1	0	0	3	0	5	0	1	66	6	0	4	33	0	120	1,042
4:20 PM	0	0	0	1	0	2	2	2	0	4	43	2	0	4	17	1	78	996
4:25 PM	0	0	1	1	0	0	0	4	0	1	38	3	0	1	30	1	80	1,008
4:30 PM	0	0	0	0	0	3	0	0	0	2	47	5	0	2	26	1	86	1,001
4:35 PM	0	0	2	0	0	2	0	7	0	1	46	4	0	3	35	4	104	1,006
4:40 PM	0	1	0	0	0	2	2	2	0	1	41	1	0	1	29	1	81	953
4:45 PM	0	2	3	0	0	1	2	5	0	1	51	3	0	2	19	0	89	928
4:50 PM	0	2	0	0	0	0	1	1	0	0	37	4	0	1	18	0	64	892
4:55 PM	0	2	1	0	0	2	0	5	0	1	37	6	0	2	15	2	73	880
5:00 PM	0	4	0	1	0	1	1	5	0	1	33	4	0	3	21	0	74	880
5:05 PM	0	1	2	1	0	3	0	2	0	0	53	6	0	0	23	0	91	
5:10 PM	0	5	1	0	0	2	1	4	0	1	51	8	0	8	21	0	102	
5:15 PM	0	0	0	0	0	0	1	1	0	2	36	5	0	2	25	2	74	
5:20 PM	0	1	0	1	0	3	1	6	0	1	46	7	0	4	20	0	90	
5:25 PM	0	1	0	3	0	5	1	4	0	0	33	3	0	5	16	2	73	
5:30 PM	0	0	1	1	0	1	3	6	0	1	39	6	0	2	30	1	91	
5:35 PM	0	1	0	0	0	2	1	3	0	0	25	4	0	1	14	0	51	
5:40 PM	0	2	0	0	0	2	0	2	0	1	22	1	0	0	25	1	56	
5:45 PM	0	0	0	0	0	1	0	4	0	1	17	4	0	0	25	1	53	
5:50 PM	0	1	0	0	0	1	0	5	0	0	18	7	0	0	18	2	52	
5:55 PM	0	1	2	0	0	2	0	4	0	2	33	5	0	2	22	0	73	
Count Total	0	25	14	10	0	40	19	89	0	24	963	104	0	50	554	22	1,914	
Peak Hour	0	13	10	4	0	20	8	41	0	15	564	49	0	25	283	11	1,043	

Traffic Counts - Heavy Vehicles, Bicycles on Road, and Pedestrians/Bicycles on Crosswalk

Interval Start Time	Heavy Vehicles					Interval Start Time	Bicycles on Roadway					Interval Start Time	Pedestrians/Bicycles on Crosswalk				
	EB	NB	WB	SB	Total		EB	NB	WB	SB	Total		EB	NB	WB	SB	Total
4:00 PM	0	1	0	1	2	4:00 PM	0	0	0	0	0	4:00 PM	0	0	1	0	1
4:05 PM	0	0	0	3	3	4:05 PM	0	0	0	0	0	4:05 PM	0	0	1	0	1
4:10 PM	0	6	0	0	6	4:10 PM	0	0	0	0	0	4:10 PM	1	0	0	0	1
4:15 PM	0	4	0	2	6	4:15 PM	0	0	0	0	0	4:15 PM	1	0	0	0	1
4:20 PM	0	0	0	3	3	4:20 PM	0	0	0	0	0	4:20 PM	0	0	0	0	0
4:25 PM	0	0	0	0	0	4:25 PM	0	0	0	0	0	4:25 PM	0	0	0	0	0
4:30 PM	0	3	0	1	4	4:30 PM	0	0	0	0	0	4:30 PM	0	0	1	0	1
4:35 PM	0	0	0	2	2	4:35 PM	0	0	0	0	0	4:35 PM	0	1	0	0	1
4:40 PM	0	1	0	0	1	4:40 PM	0	0	0	0	0	4:40 PM	0	0	0	0	0
4:45 PM	0	0	0	0	0	4:45 PM	0	0	0	0	0	4:45 PM	0	0	1	0	1
4:50 PM	0	1	0	1	2	4:50 PM	0	0	0	0	0	4:50 PM	2	1	1	0	4
4:55 PM	0	2	0	0	2	4:55 PM	0	0	0	0	0	4:55 PM	0	1	0	0	1
5:00 PM	0	1	0	2	3	5:00 PM	0	0	0	0	0	5:00 PM	0	0	0	0	0
5:05 PM	0	0	0	1	1	5:05 PM	0	0	0	0	0	5:05 PM	0	0	1	1	2
5:10 PM	0	0	0	0	0	5:10 PM	0	0	0	0	0	5:10 PM	0	0	0	0	0
5:15 PM	0	1	0	0	1	5:15 PM	0	0	0	0	0	5:15 PM	0	0	2	0	2
5:20 PM	0	2	0	1	3	5:20 PM	0	0	0	0	0	5:20 PM	0	0	0	0	0
5:25 PM	0	1	0	0	1	5:25 PM	0	0	0	0	0	5:25 PM	0	0	0	0	0
5:30 PM	0	0	0	0	0	5:30 PM	0	0	0	0	0	5:30 PM	0	0	0	0	0
5:35 PM	0	0	0	0	0	5:35 PM	0	0	0	0	0	5:35 PM	1	0	0	0	1
5:40 PM	0	1	0	2	3	5:40 PM	0	0	0	0	0	5:40 PM	0	0	1	0	1
5:45 PM	0	0	0	1	1	5:45 PM	0	0	0	0	0	5:45 PM	0	0	1	0	1
5:50 PM	0	1	0	0	1	5:50 PM	0	0	0	0	0	5:50 PM	0	0	0	0	0
5:55 PM	0	2	0	0	2	5:55 PM	0	0	0	0	0	5:55 PM	0	0	0	0	0
Count Total	0	27	0	20	47	Count Total	0	0	0	0	0	Count Total	5	3	10	1	19
Peak Hour	0	18	0	12	30	Peak Hour	0	0	0	0	0	Peak Hour	4	3	4	1	12

ALL TRAFFIC DATA SERVICES
(303) 216-2439
www.alltrafficdata.net

Location: 8 MAIN ST & 39TH ST PM
Date: Wednesday, November 16, 2022
Peak Hour: 04:10 PM - 05:10 PM
Peak 15-Minutes: 04:30 PM - 04:45 PM

Peak Hour

Motorized Vehicles

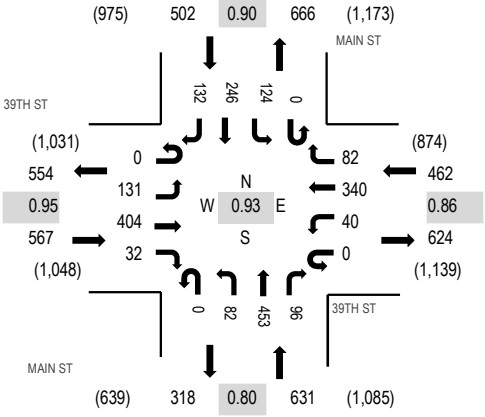

Heavy Vehicles

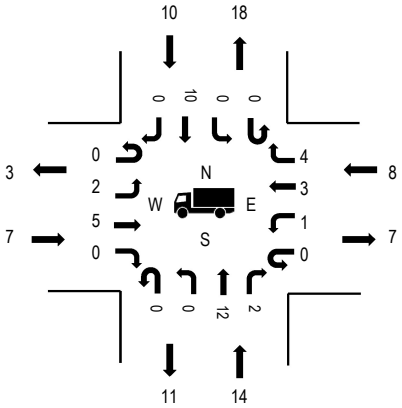

Pedestrians

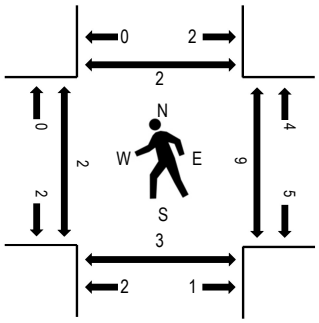

Note: Total study counts contained in parentheses.

	HV%	PHF
EB	1.2%	0.95
WB	1.7%	0.86
NB	2.2%	0.80
SB	2.0%	0.90
All	1.8%	0.93

Traffic Counts - Motorized Vehicles

Interval Start Time	39TH ST Eastbound				39TH ST Westbound				MAIN ST Northbound				MAIN ST Southbound				Total	Rolling Hour
	U-Turn	Left	Thru	Right	U-Turn	Left	Thru	Right	U-Turn	Left	Thru	Right	U-Turn	Left	Thru	Right		
4:00 PM	0	7	34	4	0	4	29	8	0	5	20	10	0	13	14	7	155	2,142
4:05 PM	0	10	37	1	0	2	21	9	0	4	25	2	0	12	32	7	162	2,137
4:10 PM	0	19	28	1	0	6	27	6	0	7	61	8	0	7	27	10	207	2,162
4:15 PM	0	12	38	2	0	4	27	6	0	6	45	5	0	7	21	8	181	2,141
4:20 PM	0	12	34	2	0	3	30	5	0	10	49	5	0	6	19	8	183	2,133
4:25 PM	0	5	23	4	0	1	24	9	0	6	28	6	0	15	27	13	161	2,109
4:30 PM	0	7	38	3	0	4	40	11	0	8	39	7	0	11	17	11	196	2,107
4:35 PM	0	6	43	1	0	6	29	7	0	7	36	10	0	14	30	7	196	2,069
4:40 PM	0	12	39	1	0	3	28	10	0	7	34	6	0	10	26	15	191	1,995
4:45 PM	0	11	31	4	0	2	27	8	0	6	34	12	0	13	12	11	171	1,941
4:50 PM	0	8	33	4	0	4	38	3	0	4	33	8	0	10	12	11	168	1,906
4:55 PM	0	15	30	6	0	3	27	5	0	7	32	10	0	9	13	14	171	1,880
5:00 PM	0	4	26	2	0	1	16	7	0	7	31	11	0	8	25	12	150	1,840
5:05 PM	0	20	41	2	0	3	27	5	0	7	31	8	0	14	17	12	187	
5:10 PM	0	13	32	5	0	2	23	7	0	8	40	8	0	12	27	9	186	
5:15 PM	0	10	27	1	0	1	22	6	0	5	38	7	0	6	31	19	173	
5:20 PM	0	13	33	2	0	3	26	3	0	7	33	5	0	9	16	9	159	
5:25 PM	0	10	31	4	0	4	28	8	0	4	34	7	0	10	13	6	159	
5:30 PM	0	1	20	1	0	6	28	9	0	3	37	10	0	7	24	12	158	
5:35 PM	0	11	31	1	0	0	21	3	0	7	18	3	0	6	15	6	122	
5:40 PM	0	8	18	3	0	1	31	10	0	4	21	3	0	6	23	9	137	
5:45 PM	0	12	23	1	0	2	24	4	0	6	16	3	0	8	26	11	136	
5:50 PM	0	10	27	5	0	4	31	4	0	5	17	5	0	7	16	11	142	
5:55 PM	0	4	27	4	0	3	18	7	0	6	21	7	0	9	20	5	131	
Count Total	0	240	744	64	0	72	642	160	0	146	773	166	0	229	503	243	3,982	
Peak Hour	0	131	404	32	0	40	340	82	0	82	453	96	0	124	246	132	2,162	

Traffic Counts - Heavy Vehicles, Bicycles on Road, and Pedestrians/Bicycles on Crosswalk

Interval Start Time	Heavy Vehicles					Interval Start Time	Bicycles on Roadway					Interval Start Time	Pedestrians/Bicycles on Crosswalk				
	EB	NB	WB	SB	Total		EB	NB	WB	SB	Total		EB	NB	WB	SB	Total
4:00 PM	3	1	1	4	9	4:00 PM	0	0	0	0	0	4:00 PM	0	0	0	0	0
4:05 PM	2	1	2	2	7	4:05 PM	0	0	0	0	0	4:05 PM	0	0	0	1	1
4:10 PM	1	2	0	0	3	4:10 PM	0	0	0	0	0	4:10 PM	0	0	0	0	0
4:15 PM	1	1	1	1	4	4:15 PM	0	0	0	0	0	4:15 PM	0	0	0	0	0
4:20 PM	3	2	1	2	8	4:20 PM	0	0	0	0	0	4:20 PM	0	0	2	0	2
4:25 PM	1	0	0	0	1	4:25 PM	0	0	1	0	1	4:25 PM	0	0	2	0	2
4:30 PM	0	1	0	1	2	4:30 PM	0	0	0	0	0	4:30 PM	0	0	0	1	1
4:35 PM	0	1	0	2	3	4:35 PM	0	0	0	0	0	4:35 PM	0	0	0	0	0
4:40 PM	0	0	0	0	0	4:40 PM	0	0	0	0	0	4:40 PM	1	0	1	0	2
4:45 PM	0	1	1	0	2	4:45 PM	0	0	0	0	0	4:45 PM	1	3	3	0	7
4:50 PM	0	0	1	1	2	4:50 PM	0	0	0	0	0	4:50 PM	0	0	0	1	1
4:55 PM	1	3	1	0	5	4:55 PM	0	0	0	0	0	4:55 PM	0	0	1	0	1
5:00 PM	0	3	3	2	8	5:00 PM	0	0	0	0	0	5:00 PM	0	0	0	1	1
5:05 PM	0	0	0	1	1	5:05 PM	0	0	0	0	0	5:05 PM	0	0	0	0	0
5:10 PM	1	0	0	0	1	5:10 PM	0	0	0	0	0	5:10 PM	0	0	0	0	0
5:15 PM	2	1	0	1	4	5:15 PM	0	0	0	0	0	5:15 PM	0	0	2	0	2
5:20 PM	0	2	0	0	2	5:20 PM	0	0	0	0	0	5:20 PM	0	0	0	0	0
5:25 PM	0	1	0	0	1	5:25 PM	0	0	0	0	0	5:25 PM	0	0	4	4	8
5:30 PM	0	0	0	0	0	5:30 PM	0	0	0	0	0	5:30 PM	0	0	1	0	1
5:35 PM	0	0	0	0	0	5:35 PM	0	0	0	0	0	5:35 PM	0	0	0	1	1
5:40 PM	0	0	0	3	3	5:40 PM	0	1	0	0	1	5:40 PM	1	0	1	0	2
5:45 PM	1	1	0	3	5	5:45 PM	0	0	0	0	0	5:45 PM	0	0	0	1	1
5:50 PM	0	1	0	1	2	5:50 PM	0	0	0	0	0	5:50 PM	0	0	0	0	0
5:55 PM	1	0	1	0	2	5:55 PM	0	0	0	0	0	5:55 PM	0	0	0	0	0
Count Total	17	22	12	24	75	Count Total	0	1	1	0	2	Count Total	3	3	17	10	33
Peak Hour	7	14	8	10	39	Peak Hour	0	0	1	0	1	Peak Hour	2	3	9	3	17

ALL TRAFFIC DATA SERVICES
(303) 216-2439
www.alltrafficdata.net

Location: 9 MAIN ST & 40TH ST PM
Date: Wednesday, November 16, 2022
Peak Hour: 04:00 PM - 05:00 PM
Peak 15-Minutes: 04:10 PM - 04:25 PM

Peak Hour

Motorized Vehicles

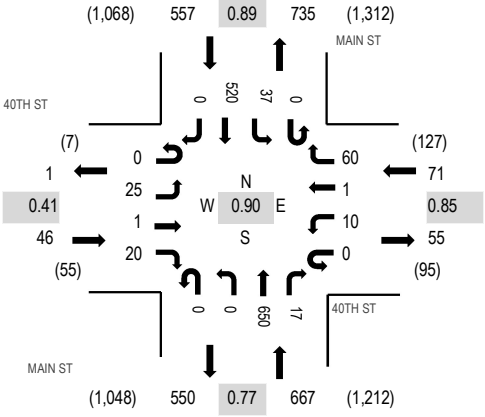

Heavy Vehicles

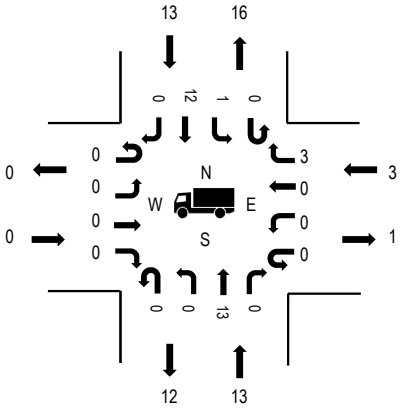

Pedestrians

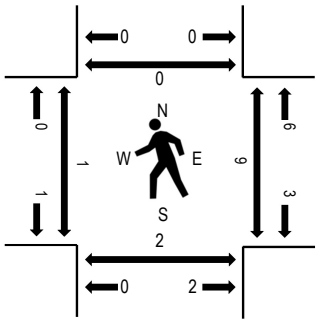

Note: Total study counts contained in parentheses.

	HV%	PHF
EB	0.0%	0.41
WB	4.2%	0.85
NB	1.9%	0.77
SB	2.3%	0.89
All	2.2%	0.90

Traffic Counts - Motorized Vehicles

Interval Start Time	40TH ST Eastbound				40TH ST Westbound				MAIN ST Northbound				MAIN ST Southbound				Total	Rolling Hour
	U-Turn	Left	Thru	Right	U-Turn	Left	Thru	Right	U-Turn	Left	Thru	Right	U-Turn	Left	Thru	Right		
4:00 PM	0	0	0	1	0	0	0	8	0	0	37	0	0	2	44	0	92	1,341
4:05 PM	0	2	0	0	0	1	0	5	0	0	47	1	0	1	60	0	117	1,332
4:10 PM	0	1	0	1	0	1	0	3	0	0	80	1	0	2	37	0	126	1,338
4:15 PM	0	1	0	1	0	2	1	4	0	0	69	2	0	6	39	0	125	1,330
4:20 PM	0	1	0	0	0	1	0	6	0	0	67	2	0	2	42	0	121	1,317
4:25 PM	0	4	0	5	0	1	0	6	0	0	44	0	0	3	50	0	113	1,299
4:30 PM	0	11	0	6	0	0	0	7	0	0	58	2	0	3	36	0	123	1,278
4:35 PM	0	1	0	2	0	0	0	7	0	0	46	2	0	7	56	0	121	1,241
4:40 PM	0	1	0	1	0	0	0	2	0	0	55	1	0	6	48	0	114	1,194
4:45 PM	0	1	0	0	0	2	0	2	0	0	53	3	0	2	30	0	93	1,158
4:50 PM	0	0	0	2	0	1	0	8	0	0	45	2	0	1	42	0	101	1,149
4:55 PM	0	2	1	1	0	1	0	2	0	0	49	1	0	2	36	0	95	1,130
5:00 PM	0	1	0	1	0	4	0	4	0	4	31	0	0	2	36	0	83	1,121
5:05 PM	0	0	0	0	0	2	0	3	0	1	60	3	0	0	54	0	123	
5:10 PM	0	0	0	0	0	1	0	1	0	0	64	1	0	3	47	1	118	
5:15 PM	0	0	0	0	0	0	0	4	0	0	54	1	0	3	50	0	112	
5:20 PM	0	0	0	1	0	0	0	5	0	0	52	0	0	3	42	0	103	
5:25 PM	0	0	0	0	0	0	0	2	0	0	52	2	0	3	33	0	92	
5:30 PM	0	0	0	4	0	1	0	2	0	0	45	0	0	3	31	0	86	
5:35 PM	0	0	0	0	0	1	0	2	0	0	31	0	0	1	39	0	74	
5:40 PM	0	0	0	0	0	0	0	2	0	0	38	1	0	2	35	0	78	
5:45 PM	0	0	0	0	0	0	0	3	0	0	38	0	0	3	40	0	84	
5:50 PM	0	0	0	1	0	0	0	2	0	0	27	1	0	6	45	0	82	
5:55 PM	0	1	0	0	0	1	0	16	0	0	37	2	0	0	29	0	86	
Count Total	0	27	1	27	0	20	1	106	0	5	1,179	28	0	66	1,001	1	2,462	
Peak Hour	0	25	1	20	0	10	1	60	0	0	650	17	0	37	520	0	1,341	

Traffic Counts - Heavy Vehicles, Bicycles on Road, and Pedestrians/Bicycles on Crosswalk

Interval Start Time	Heavy Vehicles					Interval Start Time	Bicycles on Roadway					Interval Start Time	Pedestrians/Bicycles on Crosswalk				
	EB	NB	WB	SB	Total		EB	NB	WB	SB	Total		EB	NB	WB	SB	Total
4:00 PM	0	1	0	4	5	4:00 PM	0	0	0	0	0	4:00 PM	0	0	0	0	0
4:05 PM	0	1	0	1	2	4:05 PM	0	0	0	0	0	4:05 PM	0	0	0	0	0
4:10 PM	0	0	0	0	0	4:10 PM	0	0	0	0	0	4:10 PM	0	0	2	0	2
4:15 PM	0	2	1	1	4	4:15 PM	0	0	0	0	0	4:15 PM	0	0	1	0	1
4:20 PM	0	3	0	2	5	4:20 PM	0	0	0	0	0	4:20 PM	0	0	0	0	0
4:25 PM	0	1	0	0	1	4:25 PM	0	0	0	0	0	4:25 PM	0	2	2	0	4
4:30 PM	0	0	0	1	1	4:30 PM	0	0	0	0	0	4:30 PM	0	0	1	0	1
4:35 PM	0	1	1	2	4	4:35 PM	0	0	0	0	0	4:35 PM	0	0	2	0	2
4:40 PM	0	0	1	1	2	4:40 PM	0	0	0	0	0	4:40 PM	1	0	1	0	2
4:45 PM	0	1	0	0	1	4:45 PM	0	0	0	0	0	4:45 PM	1	0	0	0	1
4:50 PM	0	0	0	1	1	4:50 PM	0	0	0	0	0	4:50 PM	1	0	0	0	1
4:55 PM	0	3	0	0	3	4:55 PM	0	0	0	0	0	4:55 PM	0	0	0	0	0
5:00 PM	0	5	0	2	7	5:00 PM	0	0	0	0	0	5:00 PM	0	0	1	0	1
5:05 PM	0	0	0	1	1	5:05 PM	0	0	0	0	0	5:05 PM	0	0	0	0	0
5:10 PM	0	0	0	0	0	5:10 PM	0	0	0	0	0	5:10 PM	0	0	0	0	0
5:15 PM	0	2	0	1	3	5:15 PM	0	0	0	0	0	5:15 PM	0	0	1	0	1
5:20 PM	0	2	0	0	2	5:20 PM	0	0	0	0	0	5:20 PM	3	0	2	0	5
5:25 PM	0	1	0	0	1	5:25 PM	0	0	0	0	0	5:25 PM	0	0	0	0	0
5:30 PM	0	0	0	0	0	5:30 PM	0	0	0	0	0	5:30 PM	0	0	0	0	0
5:35 PM	0	0	0	1	1	5:35 PM	0	0	0	0	0	5:35 PM	0	0	3	0	3
5:40 PM	0	0	0	1	1	5:40 PM	0	1	0	0	1	5:40 PM	1	1	0	0	2
5:45 PM	0	1	0	1	2	5:45 PM	0	0	0	0	0	5:45 PM	0	0	1	0	1
5:50 PM	0	1	0	0	1	5:50 PM	0	0	0	0	0	5:50 PM	0	0	0	0	0
5:55 PM	0	1	0	0	1	5:55 PM	0	0	0	0	0	5:55 PM	0	0	0	0	0
Count Total	0	26	3	20	49	Count Total	0	1	0	0	1	Count Total	7	3	17	0	27
Peak Hour	0	13	3	13	29	Peak Hour	0	0	0	0	0	Peak Hour	3	2	9	0	14

ALL TRAFFIC DATA SERVICES
(303) 216-2439
www.alltrafficdata.net

Location: 10 MAIN ST & 45TH ST PM
Date: Wednesday, November 16, 2022
Peak Hour: 04:00 PM - 05:00 PM
Peak 15-Minutes: 04:10 PM - 04:25 PM

Peak Hour

Motorized Vehicles

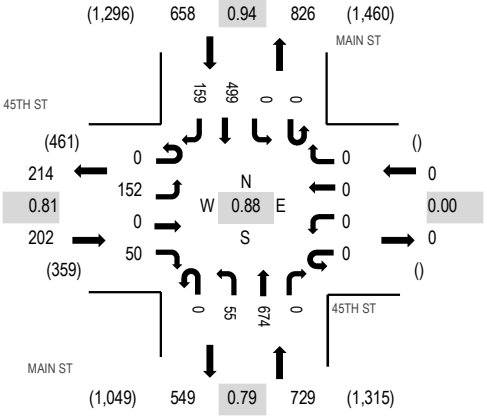

Heavy Vehicles

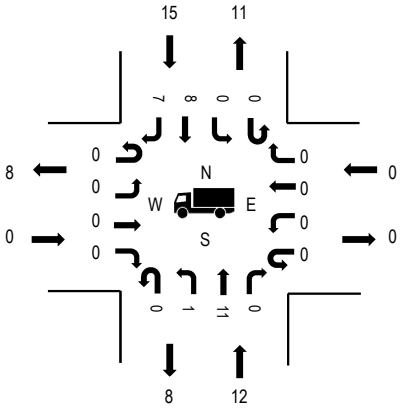

Pedestrians

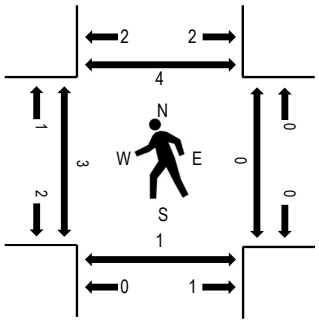

Note: Total study counts contained in parentheses.

	HV%	PHF
EB	0.0%	0.81
WB	0.0%	0.00
NB	1.6%	0.79
SB	2.3%	0.94
All	1.7%	0.88

Traffic Counts - Motorized Vehicles

Interval Start Time	45TH ST Eastbound				45TH ST Westbound				MAIN ST Northbound				MAIN ST Southbound				Total	Rolling Hour
	U-Turn	Left	Thru	Right	U-Turn	Left	Thru	Right	U-Turn	Left	Thru	Right	U-Turn	Left	Thru	Right		
4:00 PM	0	15	0	5	0	0	0	0	0	3	40	0	0	0	39	11	113	1,589
4:05 PM	0	12	0	3	0	0	0	0	0	2	49	0	0	0	59	10	135	1,566
4:10 PM	0	11	0	3	0	0	0	0	0	2	84	0	0	0	42	7	149	1,567
4:15 PM	0	22	0	8	0	0	0	0	0	5	66	0	0	0	34	18	153	1,561
4:20 PM	0	11	0	7	0	0	0	0	0	6	68	0	0	0	44	12	148	1,532
4:25 PM	0	10	0	3	0	0	0	0	0	5	50	0	0	0	42	16	126	1,511
4:30 PM	0	10	0	4	0	0	0	0	0	4	76	0	0	0	37	13	144	1,501
4:35 PM	0	14	0	6	0	0	0	0	0	9	45	0	0	0	53	14	141	1,475
4:40 PM	0	11	0	5	0	0	0	0	0	5	50	0	0	0	44	13	128	1,430
4:45 PM	0	14	0	1	0	0	0	0	0	2	54	0	0	0	28	14	113	1,411
4:50 PM	0	12	0	3	0	0	0	0	0	7	43	0	0	0	39	18	122	1,410
4:55 PM	0	10	0	2	0	0	0	0	0	5	49	0	0	0	38	13	117	1,394
5:00 PM	0	12	0	3	0	0	0	0	0	4	28	0	0	0	32	11	90	1,381
5:05 PM	0	13	0	0	0	0	0	0	0	9	50	0	0	0	52	12	136	
5:10 PM	0	7	0	9	0	0	0	0	0	5	63	0	0	0	48	11	143	
5:15 PM	0	8	0	6	0	0	0	0	0	6	56	0	0	0	34	14	124	
5:20 PM	0	9	0	2	0	0	0	0	0	1	53	0	0	0	38	24	127	
5:25 PM	0	10	0	3	0	0	0	0	0	14	42	0	0	0	32	15	116	
5:30 PM	0	6	0	3	0	0	0	0	0	12	51	0	0	0	35	11	118	
5:35 PM	0	10	0	2	0	0	0	0	0	4	30	0	0	0	40	10	96	
5:40 PM	0	16	0	3	0	0	0	0	0	5	36	0	0	0	30	19	109	
5:45 PM	0	10	0	3	0	0	0	0	0	5	36	0	0	0	46	12	112	
5:50 PM	0	10	0	2	0	0	0	0	0	3	27	0	0	0	48	16	106	
5:55 PM	0	8	0	2	0	0	0	0	0	3	43	0	0	0	27	21	104	
Count Total	0	271	0	88	0	0	0	0	0	126	1,189	0	0	0	961	335	2,970	
Peak Hour	0	152	0	50	0	0	0	0	0	55	674	0	0	0	499	159	1,589	

Traffic Counts - Heavy Vehicles, Bicycles on Road, and Pedestrians/Bicycles on Crosswalk

Interval Start Time	Heavy Vehicles					Interval Start Time	Bicycles on Roadway					Interval Start Time	Pedestrians/Bicycles on Crosswalk				
	EB	NB	WB	SB	Total		EB	NB	WB	SB	Total		EB	NB	WB	SB	Total
4:00 PM	0	0	0	4	4	4:00 PM	0	0	0	0	0	4:00 PM	0	0	0	0	0
4:05 PM	0	1	0	1	2	4:05 PM	0	0	0	0	0	4:05 PM	0	0	0	0	0
4:10 PM	0	0	0	0	0	4:10 PM	0	0	0	0	0	4:10 PM	0	0	0	1	1
4:15 PM	0	2	0	1	3	4:15 PM	0	0	0	0	0	4:15 PM	0	0	0	0	0
4:20 PM	0	4	0	2	6	4:20 PM	0	0	0	0	0	4:20 PM	1	1	0	0	2
4:25 PM	0	1	0	1	2	4:25 PM	0	0	0	0	0	4:25 PM	0	0	0	0	0
4:30 PM	0	0	0	1	1	4:30 PM	0	0	0	0	0	4:30 PM	0	0	0	1	1
4:35 PM	0	2	0	2	4	4:35 PM	0	0	0	0	0	4:35 PM	0	0	0	1	1
4:40 PM	0	0	0	1	1	4:40 PM	0	0	0	0	0	4:40 PM	2	0	0	0	2
4:45 PM	0	1	0	0	1	4:45 PM	0	0	0	0	0	4:45 PM	2	0	0	2	4
4:50 PM	0	0	0	1	1	4:50 PM	0	0	0	0	0	4:50 PM	0	0	0	0	0
4:55 PM	0	1	0	1	2	4:55 PM	0	0	0	0	0	4:55 PM	0	0	0	0	0
5:00 PM	0	4	0	1	5	5:00 PM	0	0	0	0	0	5:00 PM	0	0	0	0	0
5:05 PM	1	0	0	2	3	5:05 PM	0	0	0	0	0	5:05 PM	0	0	0	1	1
5:10 PM	0	0	0	0	0	5:10 PM	0	0	0	0	0	5:10 PM	0	0	0	0	0
5:15 PM	0	1	0	1	2	5:15 PM	0	0	0	0	0	5:15 PM	4	0	0	0	4
5:20 PM	0	2	0	0	2	5:20 PM	0	0	0	0	0	5:20 PM	0	0	0	0	0
5:25 PM	0	1	0	0	1	5:25 PM	0	0	0	0	0	5:25 PM	2	0	0	2	4
5:30 PM	0	1	0	0	1	5:30 PM	0	0	0	0	0	5:30 PM	1	0	0	1	2
5:35 PM	1	0	0	2	3	5:35 PM	0	0	0	0	0	5:35 PM	1	0	0	1	2
5:40 PM	0	0	0	0	0	5:40 PM	0	0	0	0	0	5:40 PM	0	0	0	0	0
5:45 PM	0	1	0	1	2	5:45 PM	0	0	0	0	0	5:45 PM	2	0	0	0	2
5:50 PM	0	1	0	0	1	5:50 PM	0	0	0	0	0	5:50 PM	0	0	0	0	0
5:55 PM	0	0	0	0	0	5:55 PM	0	0	0	0	0	5:55 PM	0	0	0	0	0
Count Total	2	23	0	22	47	Count Total	0	0	0	0	0	Count Total	15	1	0	10	26
Peak Hour	0	12	0	15	27	Peak Hour	0	0	0	0	0	Peak Hour	5	1	0	5	11

ALL TRAFFIC DATA SERVICES
(303) 216-2439
www.alltrafficdata.net

Location: 11 MAIN ST & HAZEL DELL AVE PM
Date: Wednesday, November 16, 2022
Peak Hour: 04:00 PM - 05:00 PM
Peak 15-Minutes: 04:05 PM - 04:20 PM

Peak Hour

Motorized Vehicles

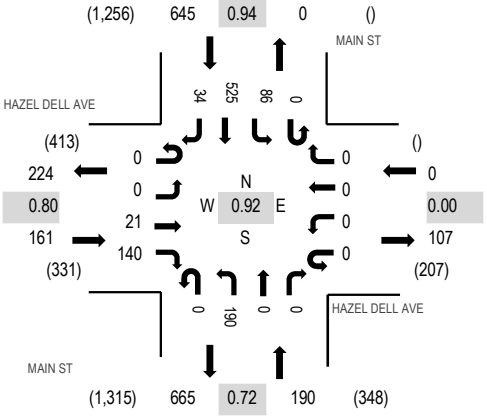

Heavy Vehicles

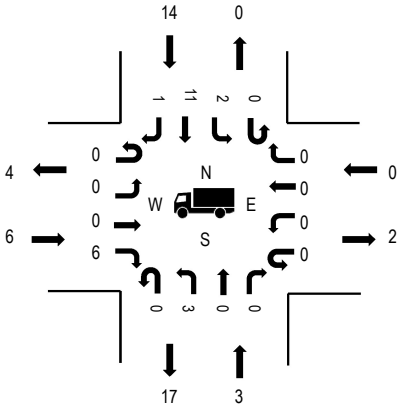

Pedestrians

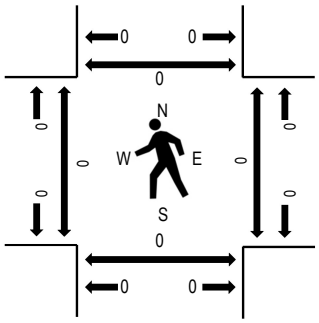

Note: Total study counts contained in parentheses.

	HV%	PHF
EB	3.7%	0.80
WB	0.0%	0.00
NB	1.6%	0.72
SB	2.2%	0.94
All	2.3%	0.92

Traffic Counts - Motorized Vehicles

Interval Start Time	HAZEL DELL AVE Eastbound				HAZEL DELL AVE Westbound				MAIN ST Northbound				MAIN ST Southbound					Rolling Hour
	U-Turn	Left	Thru	Right	U-Turn	Left	Thru	Right	U-Turn	Left	Thru	Right	U-Turn	Left	Thru	Right	Total	
4:00 PM	0	0	2	12	0	0	0	0	0	12	0	0	0	5	40	2	73	996
4:05 PM	0	0	1	19	0	0	0	0	0	16	0	0	0	13	49	4	102	994
4:10 PM	0	0	2	12	0	0	0	0	0	27	0	0	0	5	35	1	82	982
4:15 PM	0	0	3	13	0	0	0	0	0	20	0	0	0	5	42	4	87	982
4:20 PM	0	0	3	14	0	0	0	0	0	19	0	0	0	3	41	2	82	976
4:25 PM	0	0	1	5	0	0	0	0	0	10	0	0	0	5	53	2	76	982
4:30 PM	0	0	1	10	0	0	0	0	0	25	0	0	0	9	42	4	91	972
4:35 PM	0	0	3	14	0	0	0	0	0	8	0	0	0	7	54	3	89	959
4:40 PM	0	0	0	16	0	0	0	0	0	8	0	0	0	5	42	3	74	934
4:45 PM	0	0	0	6	0	0	0	0	0	18	0	0	0	12	36	3	75	934
4:50 PM	0	0	2	10	0	0	0	0	0	13	0	0	0	8	49	4	86	945
4:55 PM	0	0	3	9	0	0	0	0	0	14	0	0	0	9	42	2	79	943
5:00 PM	0	0	4	11	0	0	0	0	0	10	0	0	0	7	34	5	71	939
5:05 PM	0	0	4	21	0	0	0	0	0	7	0	0	0	12	44	2	90	
5:10 PM	0	0	1	12	0	0	0	0	0	11	0	0	0	11	45	2	82	
5:15 PM	0	0	1	8	0	0	0	0	0	16	0	0	0	8	47	1	81	
5:20 PM	0	0	0	12	0	0	0	0	0	16	0	0	0	9	49	2	88	
5:25 PM	0	0	2	7	0	0	0	0	0	13	0	0	0	2	40	2	66	
5:30 PM	0	0	2	9	0	0	0	0	0	17	0	0	0	10	37	3	78	
5:35 PM	0	0	3	16	0	0	0	0	0	8	0	0	0	1	34	2	64	
5:40 PM	0	0	0	12	0	0	0	0	0	18	0	0	0	3	39	2	74	
5:45 PM	0	0	1	16	0	0	0	0	0	11	0	0	0	8	46	4	86	
5:50 PM	0	0	1	13	0	0	0	0	0	15	0	0	0	6	48	1	84	
5:55 PM	0	0	2	12	0	0	0	0	0	16	0	0	0	2	38	5	75	
Count Total	0	0	42	289	0	0	0	0	0	348	0	0	0	165	1,026	65	1,935	
Peak Hour	0	0	21	140	0	0	0	0	0	190	0	0	0	86	525	34	996	

Traffic Counts - Heavy Vehicles, Bicycles on Road, and Pedestrians/Bicycles on Crosswalk

Interval Start Time	Heavy Vehicles					Interval Start Time	Bicycles on Roadway					Interval Start Time	Pedestrians/Bicycles on Crosswalk				
	EB	NB	WB	SB	Total		EB	NB	WB	SB	Total		EB	NB	WB	SB	Total
4:00 PM	3	0	0	3	6	4:00 PM	0	0	0	0	0	4:00 PM	0	0	0	0	0
4:05 PM	1	0	0	0	1	4:05 PM	0	0	0	0	0	4:05 PM	0	0	0	0	0
4:10 PM	0	0	0	2	2	4:10 PM	0	0	0	0	0	4:10 PM	0	0	0	0	0
4:15 PM	1	1	0	1	3	4:15 PM	0	0	0	0	0	4:15 PM	0	0	0	0	0
4:20 PM	0	1	0	2	3	4:20 PM	0	0	0	0	0	4:20 PM	0	0	0	0	0
4:25 PM	0	0	0	1	1	4:25 PM	0	0	0	0	0	4:25 PM	0	0	0	0	0
4:30 PM	1	0	0	0	1	4:30 PM	0	0	0	0	0	4:30 PM	0	0	0	0	0
4:35 PM	0	0	0	2	2	4:35 PM	0	0	0	0	0	4:35 PM	0	0	0	0	0
4:40 PM	0	0	0	1	1	4:40 PM	0	0	0	0	0	4:40 PM	0	0	0	0	0
4:45 PM	0	0	0	0	0	4:45 PM	0	0	0	0	0	4:45 PM	0	0	0	0	0
4:50 PM	0	1	0	1	2	4:50 PM	0	0	0	0	0	4:50 PM	0	0	0	0	0
4:55 PM	0	0	0	1	1	4:55 PM	0	0	0	0	0	4:55 PM	0	0	0	0	0
5:00 PM	0	1	0	1	2	5:00 PM	0	0	0	0	0	5:00 PM	0	0	0	0	0
5:05 PM	1	0	0	0	1	5:05 PM	0	0	0	0	0	5:05 PM	0	0	0	0	0
5:10 PM	0	1	0	1	2	5:10 PM	0	0	0	0	0	5:10 PM	4	0	0	0	4
5:15 PM	0	0	0	1	1	5:15 PM	0	0	0	0	0	5:15 PM	0	0	0	0	0
5:20 PM	0	1	0	0	1	5:20 PM	0	0	0	0	0	5:20 PM	0	0	0	0	0
5:25 PM	0	0	0	0	0	5:25 PM	0	0	0	0	0	5:25 PM	0	0	0	0	0
5:30 PM	0	0	0	1	1	5:30 PM	0	0	0	0	0	5:30 PM	0	0	0	0	0
5:35 PM	1	0	0	1	2	5:35 PM	0	0	0	0	0	5:35 PM	0	0	0	0	0
5:40 PM	0	0	0	0	0	5:40 PM	0	0	0	0	0	5:40 PM	0	0	0	0	0
5:45 PM	0	0	0	1	1	5:45 PM	0	0	0	0	0	5:45 PM	0	0	0	0	0
5:50 PM	0	1	0	0	1	5:50 PM	0	0	0	0	0	5:50 PM	0	0	0	0	0
5:55 PM	0	0	0	0	0	5:55 PM	0	0	0	0	0	5:55 PM	0	0	0	0	0
Count Total	8	7	0	20	35	Count Total	0	0	0	0	0	Count Total	4	0	0	0	4
Peak Hour	6	3	0	14	23	Peak Hour	0	0	0	0	0	Peak Hour	0	0	0	0	0

ALL TRAFFIC DATA SERVICES
(303) 216-2439
www.alltrafficdata.net

Location: 12 MAIN ST & I-5 SB OFFRAMP PM
Date: Wednesday, November 16, 2022
Peak Hour: 04:25 PM - 05:25 PM
Peak 15-Minutes: 04:25 PM - 04:40 PM

Peak Hour

Motorized Vehicles

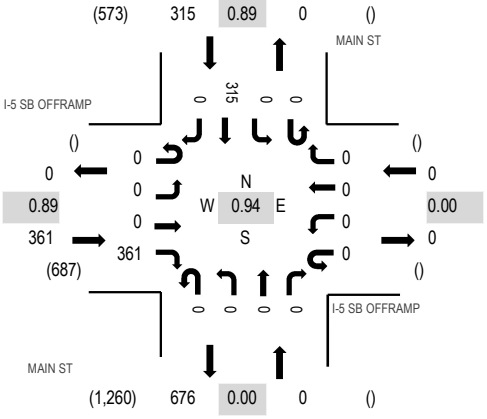

Heavy Vehicles

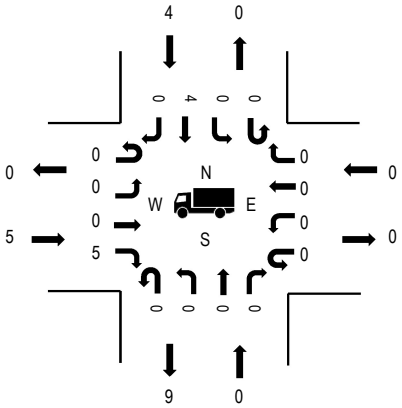

Pedestrians

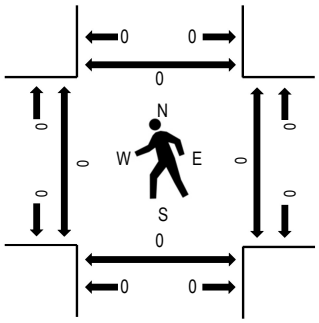

Note: Total study counts contained in parentheses.

	HV%	PHF
EB	1.4%	0.89
WB	0.0%	0.00
NB	0.0%	0.00
SB	1.3%	0.89
All	1.3%	0.94

Traffic Counts - Motorized Vehicles

Interval Start Time	I-5 SB OFFRAMP Eastbound				I-5 SB OFFRAMP Westbound				MAIN ST Northbound				MAIN ST Southbound				Total	Rolling Hour
	U-Turn	Left	Thru	Right	U-Turn	Left	Thru	Right	U-Turn	Left	Thru	Right	U-Turn	Left	Thru	Right		
4:00 PM	0	0	0	23	0	0	0	0	0	0	0	0	0	0	21	0	44	646
4:05 PM	0	0	0	28	0	0	0	0	0	0	0	0	0	0	40	0	68	649
4:10 PM	0	0	0	23	0	0	0	0	0	0	0	0	0	0	19	0	42	638
4:15 PM	0	0	0	34	0	0	0	0	0	0	0	0	0	0	15	0	49	656
4:20 PM	0	0	0	34	0	0	0	0	0	0	0	0	0	0	13	0	47	664
4:25 PM	0	0	0	30	0	0	0	0	0	0	0	0	0	0	30	0	60	676
4:30 PM	0	0	0	26	0	0	0	0	0	0	0	0	0	0	33	0	59	662
4:35 PM	0	0	0	35	0	0	0	0	0	0	0	0	0	0	25	0	60	652
4:40 PM	0	0	0	23	0	0	0	0	0	0	0	0	0	0	26	0	49	630
4:45 PM	0	0	0	33	0	0	0	0	0	0	0	0	0	0	19	0	52	624
4:50 PM	0	0	0	26	0	0	0	0	0	0	0	0	0	0	36	0	62	630
4:55 PM	0	0	0	31	0	0	0	0	0	0	0	0	0	0	23	0	54	623
5:00 PM	0	0	0	25	0	0	0	0	0	0	0	0	0	0	22	0	47	614
5:05 PM	0	0	0	29	0	0	0	0	0	0	0	0	0	0	28	0	57	
5:10 PM	0	0	0	37	0	0	0	0	0	0	0	0	0	0	23	0	60	
5:15 PM	0	0	0	37	0	0	0	0	0	0	0	0	0	0	20	0	57	
5:20 PM	0	0	0	29	0	0	0	0	0	0	0	0	0	0	30	0	59	
5:25 PM	0	0	0	29	0	0	0	0	0	0	0	0	0	0	17	0	46	
5:30 PM	0	0	0	24	0	0	0	0	0	0	0	0	0	0	25	0	49	
5:35 PM	0	0	0	27	0	0	0	0	0	0	0	0	0	0	11	0	38	
5:40 PM	0	0	0	22	0	0	0	0	0	0	0	0	0	0	21	0	43	
5:45 PM	0	0	0	33	0	0	0	0	0	0	0	0	0	0	25	0	58	
5:50 PM	0	0	0	25	0	0	0	0	0	0	0	0	0	0	30	0	55	
5:55 PM	0	0	0	24	0	0	0	0	0	0	0	0	0	0	21	0	45	
Count Total	0	0	0	687	0	0	0	0	0	0	0	0	0	0	573	0	1,260	
Peak Hour	0	0	0	361	0	0	0	0	0	0	0	0	0	0	315	0	676	

Traffic Counts - Heavy Vehicles, Bicycles on Road, and Pedestrians/Bicycles on Crosswalk

Interval Start Time	Heavy Vehicles					Interval Start Time	Bicycles on Roadway					Interval Start Time	Pedestrians/Bicycles on Crosswalk				
	EB	NB	WB	SB	Total		EB	NB	WB	SB	Total		EB	NB	WB	SB	Total
4:00 PM	1	0	0	2	3	4:00 PM	0	0	0	0	0	4:00 PM	0	0	0	0	0
4:05 PM	0	0	0	0	0	4:05 PM	0	0	0	0	0	4:05 PM	0	0	0	0	0
4:10 PM	1	0	0	0	1	4:10 PM	0	0	0	0	0	4:10 PM	0	0	0	0	0
4:15 PM	1	0	0	0	1	4:15 PM	0	0	0	0	0	4:15 PM	0	0	0	0	0
4:20 PM	1	0	0	1	2	4:20 PM	0	0	0	0	0	4:20 PM	0	0	0	0	0
4:25 PM	1	0	0	0	1	4:25 PM	0	0	0	0	0	4:25 PM	0	0	0	0	0
4:30 PM	0	0	0	0	0	4:30 PM	0	0	0	0	0	4:30 PM	0	0	0	0	0
4:35 PM	1	0	0	1	2	4:35 PM	0	0	0	0	0	4:35 PM	0	0	0	0	0
4:40 PM	1	0	0	0	1	4:40 PM	0	0	0	0	0	4:40 PM	0	0	0	0	0
4:45 PM	0	0	0	0	0	4:45 PM	0	0	0	0	0	4:45 PM	0	0	0	0	0
4:50 PM	0	0	0	1	1	4:50 PM	0	0	0	0	0	4:50 PM	0	0	0	0	0
4:55 PM	1	0	0	0	1	4:55 PM	0	0	0	0	0	4:55 PM	0	0	0	0	0
5:00 PM	0	0	0	1	1	5:00 PM	0	0	0	0	0	5:00 PM	0	0	0	0	0
5:05 PM	1	0	0	0	1	5:05 PM	0	0	0	0	0	5:05 PM	0	0	0	0	0
5:10 PM	0	0	0	0	0	5:10 PM	0	0	0	0	0	5:10 PM	0	0	0	0	0
5:15 PM	0	0	0	1	1	5:15 PM	0	0	0	0	0	5:15 PM	0	0	0	0	0
5:20 PM	0	0	0	0	0	5:20 PM	0	0	0	0	0	5:20 PM	0	0	0	0	0
5:25 PM	0	0	0	0	0	5:25 PM	0	0	0	0	0	5:25 PM	0	0	0	0	0
5:30 PM	0	0	0	0	0	5:30 PM	0	0	0	0	0	5:30 PM	0	0	0	0	0
5:35 PM	0	0	0	1	1	5:35 PM	0	0	0	0	0	5:35 PM	0	0	0	0	0
5:40 PM	0	0	0	0	0	5:40 PM	0	0	0	0	0	5:40 PM	0	0	0	0	0
5:45 PM	0	0	0	1	1	5:45 PM	0	0	0	0	0	5:45 PM	0	0	0	0	0
5:50 PM	0	0	0	0	0	5:50 PM	0	0	0	0	0	5:50 PM	0	0	0	0	0
5:55 PM	0	0	0	0	0	5:55 PM	0	0	0	0	0	5:55 PM	0	0	0	0	0
Count Total	9	0	0	9	18	Count Total	0	0	0	0	0	Count Total	0	0	0	0	0
Peak Hour	5	0	0	4	9	Peak Hour	0	0	0	0	0	Peak Hour	0	0	0	0	0

ALL TRAFFIC DATA SERVICES
(303) 216-2439
www.alltrafficdata.net

Location: 5 MAIN ST & 29TH ST PM
Date: Wednesday, November 16, 2022
Peak Hour: 04:00 PM - 05:00 PM
Peak 15-Minutes: 04:05 PM - 04:20 PM

Peak Hour - Motorized Vehicles

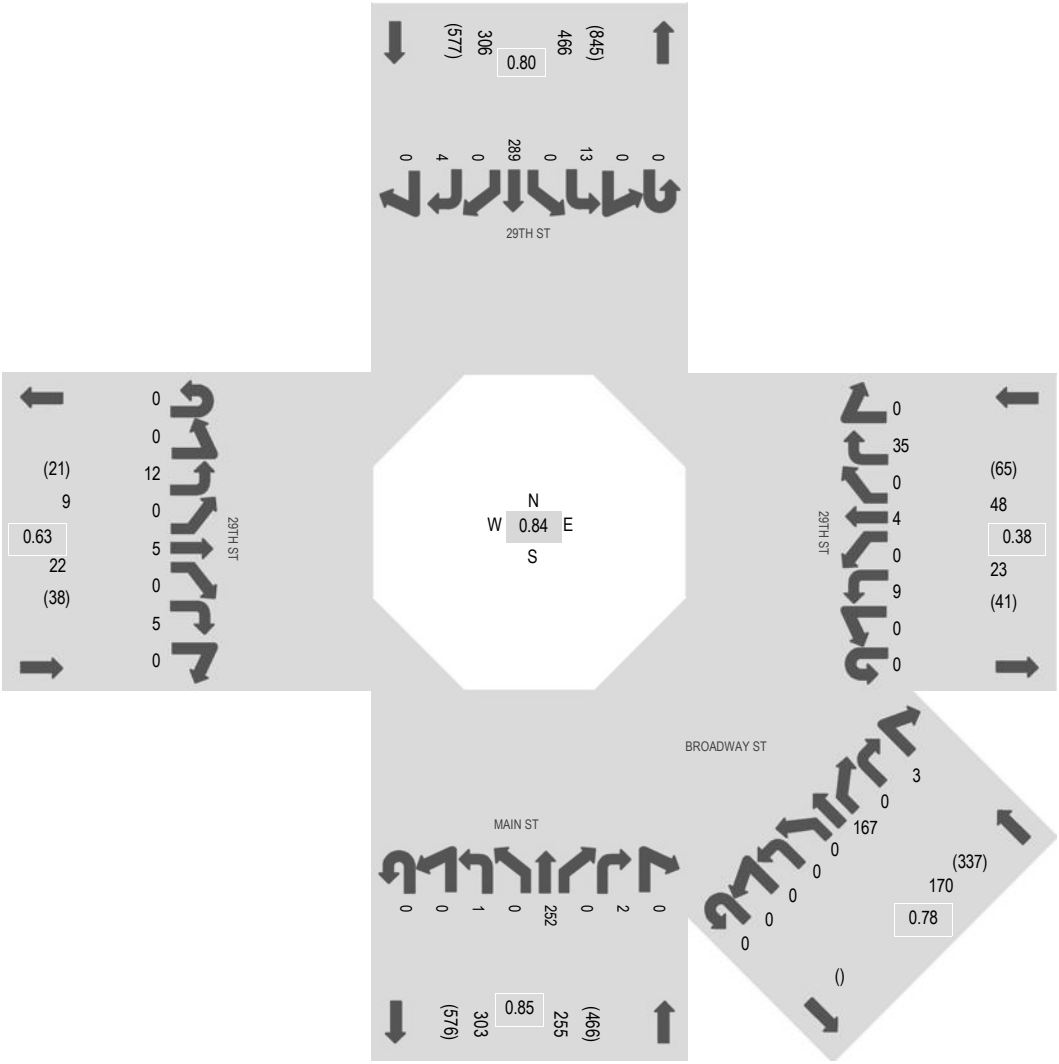

Note: Total study counts contained in parentheses.

Peak Hour - Pedestrians/Bicycles on Crosswalk

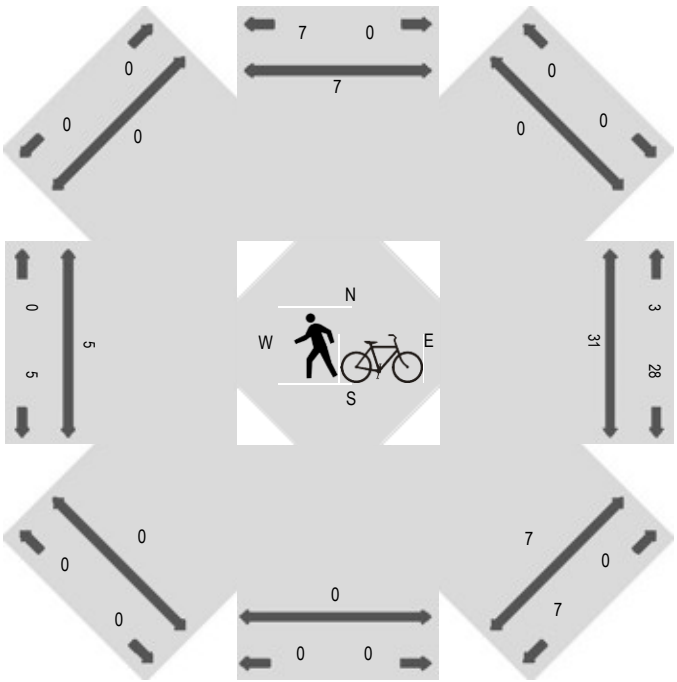

Peak Hour - Heavy Vehicles

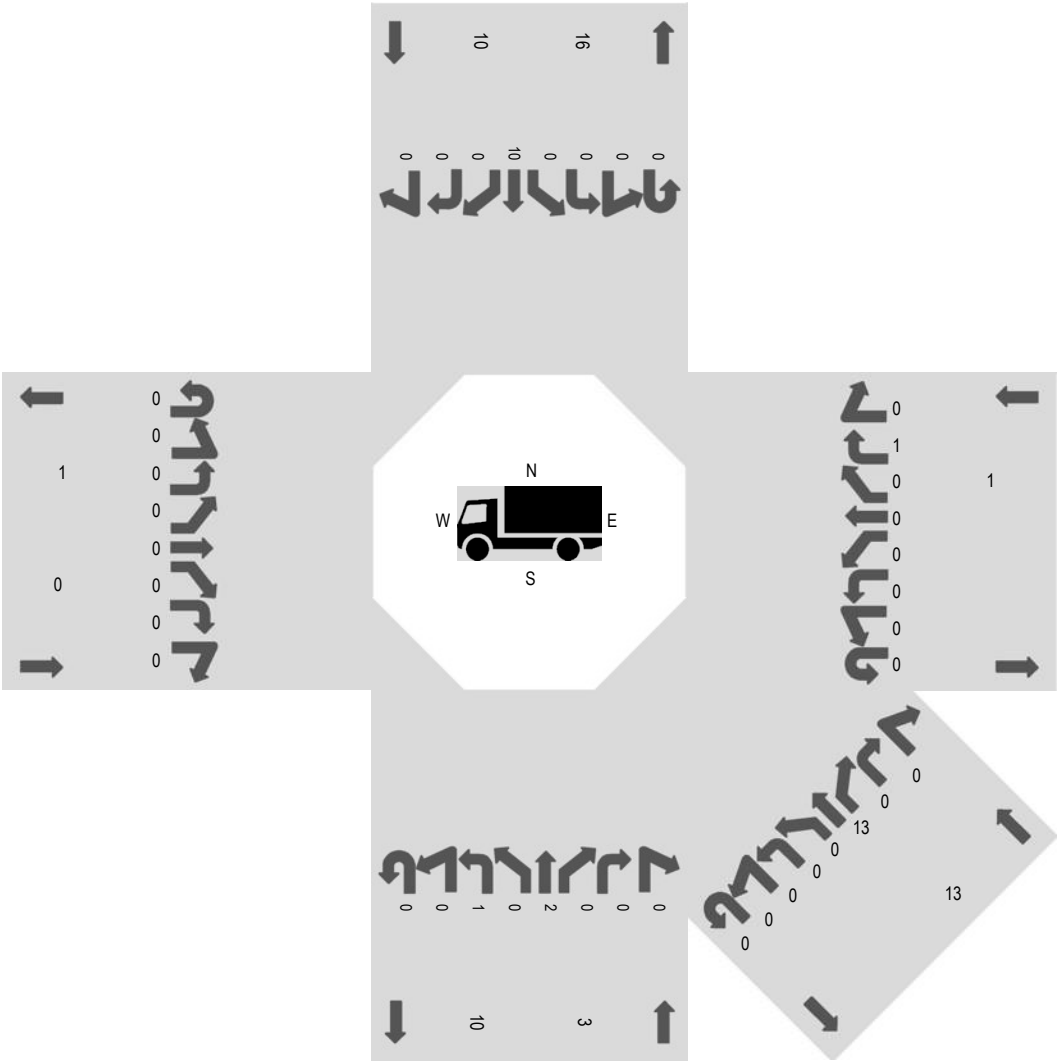

	HV%	PHF
WB	2.1%	0.38
NWB	7.6%	0.78
NB	1.2%	0.85
NEB	0.0%	0.00
EB	0.0%	0.63
SEB	0.0%	0.00
SB	3.3%	0.80
SWB	0.0%	0.00
All	3.4%	0.84

Traffic Counts - Motorized Vehicles

Interval Start Time	Westbound								Northwestbound								Northbound								Northeastbound							
	U	HL	L	BL	T	BR	R	HR	U	HL	L	BL	T	BR	R	HR	U	HL	L	BL	T	BR	R	HR	U	HL	L	BL	T	BR	R	HR
4:00 PM	0	0	1	0	0	0	4	0	0	0	0	0	0	18	0	1	0	0	0	0	16	0	1	0								
4:05 PM	0	0	1	0	0	0	3	0	0	0	0	0	0	17	0	0	0	0	0	0	23	0	1	0								
4:10 PM	0	0	3	0	1	0	17	0	0	0	0	0	0	14	0	0	0	0	0	0	25	0	0	0								
4:15 PM	0	0	1	0	1	0	5	0	0	0	0	0	0	12	0	0	0	0	0	0	18	0	0	0								
4:20 PM	0	0	0	0	1	0	1	0	0	0	0	0	0	19	0	0	0	0	0	0	18	0	0	0								
4:25 PM	0	0	1	0	0	0	1	0	0	0	0	0	0	12	0	0	0	0	1	0	18	0	0	0								
4:30 PM	0	0	0	0	1	0	0	0	0	0	0	0	0	14	0	1	0	0	0	0	20	0	0	0								
4:35 PM	0	0	0	0	0	0	1	0	0	0	0	0	0	10	0	0	0	0	0	0	33	0	0	0								
4:40 PM	0	0	1	0	0	0	0	0	0	0	0	0	0	10	0	1	0	0	0	0	26	0	0	0								
4:45 PM	0	0	1	0	0	0	2	0	0	0	0	0	0	17	0	0	0	0	0	0	18	0	0	0								
4:50 PM	0	0	0	0	0	0	1	0	0	0	0	0	0	7	0	0	0	0	0	0	16	0	0	0								
4:55 PM	0	0	0	0	0	0	0	0	0	0	0	0	0	17	0	0	0	0	0	0	21	0	0	0								
5:00 PM	0	0	0	0	1	0	1	0	0	0	0	0	0	10	0	2	0	0	0	0	16	0	0	0								
5:05 PM	0	0	0	0	2	0	0	0	0	0	0	0	0	15	0	1	0	0	0	0	21	0	0	0								
5:10 PM	0	0	2	0	0	0	0	0	0	0	0	0	0	22	0	0	0	0	0	0	33	0	0	0								
5:15 PM	0	0	0	0	0	0	0	0	0	0	0	0	0	18	0	1	0	0	0	0	22	0	0	0								
5:20 PM	0	0	0	0	0	0	1	0	0	0	0	0	0	18	0	0	0	0	0	0	24	0	0	0								
5:25 PM	0	0	1	0	0	0	0	0	0	0	0	0	0	10	0	1	0	0	0	0	19	0	0	0								
5:30 PM	0	0	0	0	1	0	2	0	0	0	0	0	0	14	0	2	0	0	0	0	15	0	0	0								
5:35 PM	0	0	1	0	0	0	1	0	0	0	0	0	0	7	0	1	0	0	0	0	9	0	0	0								
5:40 PM	0	0	0	0	0	0	0	0	0	0	0	0	0	5	0	0	0	0	2	0	11	0	0	0								
5:45 PM	0	0	0	0	0	0	0	0	0	0	0	0	0	12	0	0	0	0	0	0	6	0	1	0								
5:50 PM	0	0	0	0	0	0	1	0	0	0	0	0	0	13	0	0	0	0	0	0	11	0	0	0								
5:55 PM	0	0	1	0	1	0	1	0	0	0	0	0	0	14	0	1	0	0	0	0	21	0	0	0								
Count Total	0	0	14	0	9	0	42	0	0	0	0	0	0	325	0	12	0	0	3	0	460	0	3	0								
Peak Hour	0	0	9	0	4	0	35	0	0	0	0	0	0	167	0	3	0	0	1	0	252	0	2	0								

Traffic Counts - Motorized Vehicles (continued)

Interval Start Time	Eastbound								Southeastbound								Southbound								Southwestbound								Total	Rolling Hour
	U	HL	L	BL	T	BR	R	HR	U	HL	L	BL	T	BR	R	HR	U	HL	L	BL	T	BR	R	HR	U	HL	L	BL	T	BR	R	HR		
4:00 PM	0	0	0	0	2	0	0	0									0	0	2	0	20	0	0	0									65	801
4:05 PM	0	0	0	0	0	0	0	0									0	0	2	0	29	0	1	0									77	791
4:10 PM	0	0	0	0	0	0	0	0									0	0	3	0	30	0	1	0									94	782
4:15 PM	0	0	0	0	0	0	1	0									0	0	1	0	29	0	0	0									68	774
4:20 PM	0	0	5	0	0	0	1	0									0	0	0	0	21	0	1	0									67	768
4:25 PM	0	0	0	0	1	0	1	0									0	0	1	0	27	0	0	0									63	766
4:30 PM	0	0	2	0	0	0	0	0									0	0	0	0	24	0	0	0									62	759
4:35 PM	0	0	0	0	0	0	0	0									0	0	0	0	31	0	0	0									75	759
4:40 PM	0	0	1	0	0	0	1	0									0	0	2	0	28	0	1	0									71	723
4:45 PM	0	0	2	0	2	0	0	0									0	0	0	0	13	0	0	0									55	689
4:50 PM	0	0	2	0	0	0	0	0									0	0	1	0	19	0	0	0									46	679
4:55 PM	0	0	0	0	0	0	1	0									0	0	1	0	18	0	0	0									58	679
5:00 PM	0	0	0	0	0	0	1	0									0	0	0	0	24	0	0	0									55	682
5:05 PM	0	0	1	0	0	0	1	0									0	0	0	0	27	0	0	0									68	
5:10 PM	0	0	1	0	0	0	0	0									0	0	0	0	28	0	0	0									86	
5:15 PM	0	0	0	0	0	0	2	0									0	0	0	0	18	0	1	0									62	
5:20 PM	0	0	0	0	0	0	0	0									0	0	1	0	21	0	0	0									65	
5:25 PM	0	0	0	0	2	0	0	0									0	0	1	0	22	0	0	0									56	
5:30 PM	0	0	3	0	1	0	0	0									0	0	1	0	23	0	0	0									62	
5:35 PM	0	0	1	0	0	0	0	0									0	0	0	0	17	0	2	0									39	
5:40 PM	0	0	0	0	0	0	0	0									0	0	0	0	19	0	0	0									37	
5:45 PM	0	0	0	0	0	0	0	0									0	0	1	0	24	0	1	0									45	
5:50 PM	0	0	0	0	1	0	1	0									0	0	0	0	18	0	1	0									46	
5:55 PM	0	0	0	0	0	0	1	0									0	0	0	0	21	0	0	0									61	
Count Total	0	0	18	0	9	0	11	0									0	0	17	0	551	0	9	0									1,483	
Peak Hour	0	0	12	0	5	0	5	0									0	0	13	0	289	0	4	0									801	

Traffic Counts - Heavy Vehicles, Bicycles on Road, and Pedestrians/Bicycles on Crosswalk

Interval Start Time	Heavy Vehicles								
	WB	NWB	NB	NEB	EB	SEB	SB	SWB	Total
4:00 PM	0	1	0	0	0	0	1	0	2
4:05 PM	0	1	0	0	0	0	2	0	3
4:10 PM	1	3	0	0	0	0	0	0	4
4:15 PM	0	2	1	0	0	0	0	0	3
4:20 PM	0	2	1	0	0	0	1	0	4
4:25 PM	0	0	1	0	0	0	1	0	2
4:30 PM	0	1	0	0	0	0	0	0	1
4:35 PM	0	0	0	0	0	0	2	0	2
4:40 PM	0	0	0	0	0	0	1	0	1
4:45 PM	0	0	0	0	0	0	0	0	0
4:50 PM	0	1	0	0	0	0	1	0	2
4:55 PM	0	2	0	0	0	0	1	0	3
5:00 PM	0	0	0	0	0	0	1	0	1
5:05 PM	0	1	0	0	0	0	1	0	2
5:10 PM	0	1	0	0	0	0	0	0	1
5:15 PM	0	1	0	0	0	0	0	0	1
5:20 PM	0	1	1	0	0	0	1	0	3
5:25 PM	0	0	0	0	0	0	0	0	0
5:30 PM	0	0	0	0	0	0	0	0	0
5:35 PM	0	0	0	0	0	0	0	0	0
5:40 PM	0	1	0	0	0	0	2	0	3
5:45 PM	0	0	0	0	0	0	1	0	1
5:50 PM	0	1	0	0	0	0	1	0	2
5:55 PM	0	0	0	0	0	0	0	0	0
Count Total	1	19	4	0	0	0	17	0	41
Peak Hour	1	13	3	0	0	0	10	0	27

Interval Start Time	Bicycles on Roadway								
	WB	NWB	NB	NEB	EB	SEB	SB	SWB	Total
4:00 PM	0	0	0	0	1	0	0	0	1
4:05 PM	0	0	0	0	0	0	0	0	0
4:10 PM	0	0	0	0	0	0	0	0	0
4:15 PM	0	0	0	0	0	0	0	0	0
4:20 PM	0	0	0	0	0	0	0	0	0
4:25 PM	0	0	0	0	0	0	0	0	0
4:30 PM	0	0	0	0	0	0	0	0	0
4:35 PM	0	0	0	0	0	0	0	0	0
4:40 PM	0	0	0	0	1	0	0	0	1
4:45 PM	0	0	0	0	0	0	0	0	0
4:50 PM	0	0	0	0	0	0	0	0	0
4:55 PM	0	0	0	0	0	0	1	0	1
5:00 PM	0	0	0	0	0	0	0	0	0
5:05 PM	0	0	1	0	0	0	0	0	1
5:10 PM	0	0	0	0	0	0	0	0	0
5:15 PM	0	0	0	0	0	0	0	0	0
5:20 PM	0	0	0	0	0	0	0	0	0
5:25 PM	0	0	0	0	0	0	0	0	0
5:30 PM	0	0	0	0	0	0	0	0	0
5:35 PM	0	0	0	0	0	0	0	0	0
5:40 PM	0	0	0	0	0	0	0	0	0
5:45 PM	0	0	0	0	0	0	1	0	1
5:50 PM	0	0	0	0	0	0	0	0	0
5:55 PM	0	0	0	0	0	0	0	0	0
Count Total	0	0	1	0	2	0	2	0	5
Peak Hour	2	0	0	0	0	0	1	0	3

Interval Start Time	Pedestrians/Bicycles on Crosswalk								
	WB	NWB	NB	NEB	EB	SEB	SB	SWB	Total
4:00 PM	0	0	0	0	1	0	0	0	1
4:05 PM	5	0	0	0	0	0	0	0	5
4:10 PM	8	2	0	0	0	0	2	0	12
4:15 PM	9	5	0	0	2	0	4	0	20
4:20 PM	2	0	0	0	1	0	0	0	3
4:25 PM	1	0	0	0	0	0	0	0	1
4:30 PM	0	0	0	0	1	0	0	0	1
4:35 PM	0	0	0	0	0	0	0	0	0
4:40 PM	0	0	0	0	0	0	0	0	0
4:45 PM	3	0	0	0	0	0	1	0	4
4:50 PM	0	0	0	0	0	0	0	0	0
4:55 PM	3	0	0	0	0	0	0	0	3
5:00 PM	2	0	0	0	1	0	1	0	4
5:05 PM	0	0	0	0	0	0	0	0	0
5:10 PM	0	0	0	0	1	0	0	0	1
5:15 PM	1	0	0	0	0	0	1	0	2
5:20 PM	1	0	0	0	0	0	0	0	1
5:25 PM	0	0	1	0	0	0	0	0	1
5:30 PM	0	0	0	0	0	0	0	0	0
5:35 PM	3	0	0	0	0	0	2	0	5
5:40 PM	1	1	0	0	2	0	0	0	4
5:45 PM	0	0	0	0	0	0	2	0	2
5:50 PM	0	0	0	0	0	0	0	0	0
5:55 PM	0	0	0	0	0	0	0	0	0
Count Total	39	8	1	0	9	0	13	0	70
Peak Hour	31	7	0	0	5	0	7	0	50

2. VISSIM MODEL GEH STATISTIC

Intersection Name	Movement	Input Volume	VISSIM Output Volume	GEH
Main St & NE Hazel Dell Ave	SBT	1026.95	1021	0.186066275
Main St & NE Hazel Dell Ave	SBR	17.9967	19	0.23326231
Main St & NE Hazel Dell Ave	SBL	110.996	107	0.382739506
Main St & NE Hazel Dell Ave	NBL	66.9765	71	0.484415926
Main St & NE Hazel Dell Ave	NBR	356.94	348	0.476187281
Main St & NE Hazel Dell Ave	EBR	135.993	139	0.256454205
Main St & NE Hazel Dell Ave	EBT	22.9985	24	0.20660281
Main St & NE Hazel Dell Ave	Total	1738.85	1729	0.236657085
Main St & NE 45th St	SBT	979.947	976	0.126213939
Main St & NE 45th St	SBR	183	186	0.220872957
Main St & NE 45th St	EBR	52.0086	53	0.136825588
Main St & NE 45th St	EBL	168.013	162	0.46808507
Main St & NE 45th St	NBL	20.9611	19	0.438738495
Main St & NE 45th St	NBT	255.904	258	0.130773852
Main St & NE 45th St	Total	1659.83	1654	0.143301428
Main St & E 40th St	EBT	3.23622	4	0.401540905
Main St & E 40th St	EBL	8.05467	9	0.323726105
Main St & E 40th St	EBR	8.05127	8	0.0180963
Main St & E 40th St	WBT	2.23622	2	0.162306256
Main St & E 40th St	WBR	27.0369	25	0.399331141
Main St & E 40th St	NBL	5.0823	6	0.389851139
Main St & E 40th St	WBL	9.02288	12	0.918260403
Main St & E 40th St	SBL	127.992	123	0.445595474
Main St & E 40th St	NBR	13.4684	13	0.128758074
Main St & E 40th St	NBT	241.773	245	0.206829127
Main St & E 40th St	SBR	0	0	0
Main St & E 40th St	SBT	903.964	908	0.134094537
Main St & E 40th St	Total	1349.92	1355	0.138195256
Main St & E 39th St	NBT	145.126	150	0.401272474
Main St & E 39th St	NBR	36.9433	40	0.492813125
Main St & E 39th St	EBT	367.983	369	0.052982498
Main St & E 39th St	EBR	21.9638	21	0.207938536
Main St & E 39th St	WBR	37.0966	39	0.308574073
Main St & E 39th St	WBT	343.984	336	0.43299694
Main St & E 39th St	NBL	22.4983	22	0.105639088
Main St & E 39th St	WBL	104.027	105	0.095218473
Main St & E 39th St	EBL	78.1019	75	0.354525414
Main St & E 39th St	SBL	199.993	196	0.283775419
Main St & E 39th St	SBR	122.993	120	0.271516442
Main St & E 39th St	SBT	598.052	612	0.567049748

Main St & E 39th St	Total	2078.76	2086	0.158639255
Main St & E 37th St / Safeway Drwy	NBT	185.337	193	0.557150649
Main St & E 37th St / Safeway Drwy	NBR	6.99855	8	0.365696267
Main St & E 37th St / Safeway Drwy	NBL	3.12646	3	0.072254246
Main St & E 37th St / Safeway Drwy	EBL	2.25994	3	0.456343808
Main St & E 37th St / Safeway Drwy	EBT	3.10795	3	0.061772885
Main St & E 37th St / Safeway Drwy	EBR	3.06556	3	0.037644828
Main St & E 37th St / Safeway Drwy	WBR	16.9701	17	0.007244325
Main St & E 37th St / Safeway Drwy	WBT	3.10795	4	0.47318501
Main St & E 37th St / Safeway Drwy	WBL	14.9313	13	0.516796282
Main St & E 37th St / Safeway Drwy	SBL	8.38516	7	0.499417012
Main St & E 37th St / Safeway Drwy	SBR	9.04049	9	0.013479849
Main St & E 37th St / Safeway Drwy	SBT	706.617	723	0.612778862
Main St & E 37th St / Safeway Drwy	Total	962.947	987	0.770312235
Main St & E 33rd St	NBT	128.685	139	0.891575962
Main St & E 33rd St	NBR	15.4286	17	0.390241962
Main St & E 33rd St	EBT	32.9981	34	0.173097273
Main St & E 33rd St	EBR	8.87963	9	0.040256824
Main St & E 33rd St	WBR	33.9056	34	0.016206898
Main St & E 33rd St	WBT	54.9975	55	0.000343441
Main St & E 33rd St	NBL	17.4283	17	0.10322841
Main St & E 33rd St	WBL	22.9691	25	0.414682971
Main St & E 33rd St	EBL	32.8712	32	0.152962026
Main St & E 33rd St	SBL	59.9622	61	0.133443659
Main St & E 33rd St	SBR	45.323	42	0.502892304
Main St & E 33rd St	SBT	619.328	639	0.784251762
Main St & E 33rd St	Total	1072.78	1103	0.916317144
Main St / Broadway St & 29th St	NBT	64.4445	67	0.315225161
Main St / Broadway St & 29th St	SBT	606.041	621	0.603919301
Main St / Broadway St & 29th St	SBR	23.025	24	0.201075965
Main St / Broadway St & 29th St	EBL	3.11211	3	0.06412924
Main St / Broadway St & 29th St	EBR	1.34906	1	0.322083167
Main St / Broadway St & 29th St	EBT	3.10795	3	0.061772885
Main St / Broadway St & 29th St	WBR	8.97743	8	0.33547683

Main St / Broadway St & 29th St	WBL	0	0	
Main St / Broadway St & 29th St	WBT	4.10795	3	0.587710839
Main St / Broadway St & 29th St	NBL	0	0	
Main St / Broadway St & 29th St	SBL	22.111	26	0.792930999
Main St / Broadway St & 29th St	NWT	85	94	0.951329561
Main St / Broadway St & 29th St	NWR	2	4	1.154700538
Main St / Broadway St & 29th St	Total	823.276	855	1.095135301
Main St & 28th St	NBT	66.0066	67	0.121818456
Main St & 28th St	NBR	3.31774	3	0.178774682
Main St & 28th St	SBT	590.19	608	0.727619088
Main St & 28th St	SBR	17.1999	16	0.29450046
Main St & 28th St	NBL	0	0	
Main St & 28th St	EBL	0	0	
Main St & 28th St	EBR	1.31493	1	0.292723459
Main St & 28th St	EBT	0	0	0
Main St & 28th St	Total	678.03	695	0.647689289
Broadway St & E 28th St	WBR	5.05401	4	0.495379557
Broadway St & E 28th St	WBL	17.21	18	0.188290072
Broadway St & E 28th St	NBR	5.47112	6	0.220836101
Broadway St & E 28th St	NBT	82.1961	94	1.257601754
Broadway St & E 28th St	SBL	3	3	0
Broadway St & E 28th St	SBT	0	0	0
Broadway St & E 28th St	Total	112.931	126	1.195680645
Main St & 27th St	NBT	65.0185	66	0.121267471
Main St & 27th St	NBR	0.01775	2	1.973510401
Main St & 27th St	SBT	423.891	427	0.150722727
Main St & 27th St	SBR	9.28715	9	0.094960896
Main St & 27th St	EBL	4.30583	4	0.1500719
Main St & 27th St	EBR	2.97908	3	0.01209812
Main St & 27th St	EBT	0.12465	0	0.499297507
Main St & 27th St	WBR	0	0	
Main St & 27th St	WBL	0	0	
Main St & 27th St	WBT	1.40957	1	0.373137168
Main St & 27th St	NBL	6.67468	7	0.124412631
Main St & 27th St	SBL	158.327	173	1.1399917
Main St & 27th St	Total	672.035	692	0.764471849
Broadway St & E 27th St	EBT	10.9108	11	0.026959189
Broadway St & E 27th St	EBL	5.41653	8	0.99746692
Broadway St & E 27th St	EBR	142.142	156	1.135002011
Broadway St & E 27th St	WBT	1.39857	1	0.363949735
Broadway St & E 27th St	WBR	4.93331	5	0.029925075
Broadway St & E 27th St	WBL	13.4017	14	0.16163675
Broadway St & E 27th St	NBR	0	0	

Broadway St & E 27th St	NBL	0	0	
Broadway St & E 27th St	NBT	77.3174	88	1.1749904
Broadway St & E 27th St	SBL	0	0	
Broadway St & E 27th St	SBR	0.011	0	0.148303742
Broadway St & E 27th St	SBT	17.199	18	0.190940828
Broadway St & E 27th St	Total	272.73	301	1.669091448
Main St & Fourth Plain Blvd	NBT	43.5218	45	0.222194724
Main St & Fourth Plain Blvd	WBR	6.674	7	0.124677721
Main St & Fourth Plain Blvd	WBT	336.5	338	0.081702702
Main St & Fourth Plain Blvd	SBR	61.1148	61	0.014685839
Main St & Fourth Plain Blvd	SBT	308.736	311	0.128613262
Main St & Fourth Plain Blvd	EBR	37.998	37	0.162981541
Main St & Fourth Plain Blvd	EBT	287.368	290	0.154930305
Main St & Fourth Plain Blvd	WBL	52.6225	52	0.086066227
Main St & Fourth Plain Blvd	NBL	12.9985	13	0.000422139
Main St & Fourth Plain Blvd	NBR	9.2908	7	0.802659116
Main St & Fourth Plain Blvd	EBL	21.5152	24	0.520877251
Main St & Fourth Plain Blvd	SBL	57.0195	58	0.129298979
Main St & Fourth Plain Blvd	Total	1235.36	1242	0.188716095
Broadway St & E Fourth Plain Blvd	WBT	389.044	392	0.14959903
Broadway St & E Fourth Plain Blvd	WBR	38.654	39	0.055525705
Broadway St & E Fourth Plain Blvd	EBT	321.595	322	0.022571793
Broadway St & E Fourth Plain Blvd	EBL	0	0	
Broadway St & E Fourth Plain Blvd	EBR	32.0828	32	0.014626768
Broadway St & E Fourth Plain Blvd	NBL	6.75239	5	0.722906248
Broadway St & E Fourth Plain Blvd	NBR	18.9985	16	0.71678755
Broadway St & E Fourth Plain Blvd	NBT	38.6634	48	1.418366092
Broadway St & E Fourth Plain Blvd	SBR	0	0	
Broadway St & E Fourth Plain Blvd	SBL	30.597	32	0.250773243
Broadway St & E Fourth Plain Blvd	SBT	142.146	150	0.649851049
Broadway St & E Fourth Plain Blvd	WBL	66.9969	70	0.362846542
Broadway St & E Fourth Plain Blvd	Total	1085.53	1113	0.828539531

Intersection Name	Movement	Input Volume	VISSIM Output Volume	GEH
Main St & NE Hazel Dell Ave	SBT	557.706	566	0.349887561
Main St & NE Hazel Dell Ave	SBR	34.0278	33	0.177542021
Main St & NE Hazel Dell Ave	SBL	91.9971	98	0.61589258
Main St & NE Hazel Dell Ave	NBL	190.111	205	1.059285947
Main St & NE Hazel Dell Ave	NBT	0	4	2.828427125
Main St & NE Hazel Dell Ave	EBR	139.859	140	0.011889997
Main St & NE Hazel Dell Ave	EBT	21.9779	22	0.004717399
Main St & NE Hazel Dell Ave	NBR	637.224	649	0.464354437
Main St & NE Hazel Dell Ave	Total	1672.9	1717	1.071077413
Main St & NE 45th St	SBT	528.496	536	0.325245587
Main St & NE 45th St	SBR	169.069	169	0.005337298
Main St & NE 45th St	EBR	51.3973	53	0.221825607
Main St & NE 45th St	EBL	152.668	154	0.107541439
Main St & NE 45th St	NBL	55.1554	55	0.020944463
Main St & NE 45th St	NBT	674.667	702	1.041806151
Main St & NE 45th St	Total	1631.45	1669	0.924255494
Main St & E 40th St	EBT	3.60759	3	0.334274084
Main St & E 40th St	EBL	26.2108	30	0.714747107
Main St & E 40th St	EBR	19.9807	19	0.22214717
Main St & E 40th St	WBT	2.60759	2	0.400301637
Main St & E 40th St	WBR	59.8345	58	0.239005166
Main St & E 40th St	NBL	0	0	
Main St & E 40th St	WBL	10.2163	12	0.535195674
Main St & E 40th St	SBL	37.2192	34	0.53946969
Main St & E 40th St	NBR	18.2845	20	0.392094137
Main St & E 40th St	NBT	643.777	668	0.945823771
Main St & E 40th St	SBR	0	0	
Main St & E 40th St	SBT	542.675	554	0.483650864
Main St & E 40th St	Total	1364.41	1399	0.930477369
Main St & E 39th St	NBT	448.677	469	0.948754647
Main St & E 39th St	NBR	95.6948	96	0.031169327
Main St & E 39th St	EBT	403.848	408	0.206090984
Main St & E 39th St	EBR	31.9784	32	0.003813186
Main St & E 39th St	WBR	82.1807	87	0.523989784
Main St & E 39th St	WBT	339.872	341	0.061127718
Main St & E 39th St	NBL	82.8027	85	0.239888186
Main St & E 39th St	WBL	40.2815	41	0.112710436
Main St & E 39th St	EBL	131.204	133	0.156281452

Main St & E 39th St	SBL	138.384	138	0.032670805
Main St & E 39th St	SBR	147.385	150	0.214455491
Main St & E 39th St	SBT	287.103	297	0.579155138
Main St & E 39th St	Total	2229.41	2277	1.002560332
Main St & E 37th St / Safeway Drwy	NBT	572.946	595	0.912635853
Main St & E 37th St / Safeway Drwy	NBR	49.0921	47	0.301816743
Main St & E 37th St / Safeway Drwy	NBL	14.9862	17	0.503551112
Main St & E 37th St / Safeway Drwy	EBL	13.1907	14	0.219487874
Main St & E 37th St / Safeway Drwy	EBT	10.0615	11	0.289217451
Main St & E 37th St / Safeway Drwy	EBR	4.94753	5	0.023528001
Main St & E 37th St / Safeway Drwy	WBR	41.0383	40	0.163119697
Main St & E 37th St / Safeway Drwy	WBT	8.15959	8	0.056143578
Main St & E 37th St / Safeway Drwy	WBL	19.9361	20	0.0143055
Main St & E 37th St / Safeway Drwy	SBL	25.2538	24	0.252661729
Main St & E 37th St / Safeway Drwy	SBR	11.2358	11	0.070724962
Main St & E 37th St / Safeway Drwy	SBT	322.873	333	0.559237578
Main St & E 37th St / Safeway Drwy	Total	1093.72	1126	0.968943644
Main St & E 33rd St	NBT	461.47	481	0.899648937
Main St & E 33rd St	NBR	44.8766	42	0.436452045
Main St & E 33rd St	EBT	83.9688	88	0.434736434
Main St & E 33rd St	EBR	19.1104	18	0.257778236
Main St & E 33rd St	WBR	94.7898	94	0.081295388
Main St & E 33rd St	WBT	58.9775	57	0.259689646
Main St & E 33rd St	NBL	22.9047	23	0.01988807
Main St & E 33rd St	WBL	39.4599	43	0.551334305
Main St & E 33rd St	EBL	80.7636	83	0.247142249
Main St & E 33rd St	SBL	44.1382	51	0.994888643
Main St & E 33rd St	SBR	52.1373	47	0.729679048
Main St & E 33rd St	SBT	251.481	262	0.656498801
Main St & E 33rd St	Total	1254.08	1289	0.979336885
Main St / Broadway St & 29th St	NBT	287.371	287	0.021870773
Main St / Broadway St & 29th St	SBT	291.825	304	0.705358149
Main St / Broadway St & 29th St	SBR	5.20341	6	0.336569481
Main St / Broadway St & 29th St	EBL	12.3891	13	0.171471113

Main St / Broadway St & 29th St	EBR	5.79592	6	0.084033766
Main St / Broadway St & 29th St	EBT	5.48934	7	0.604520974
Main St / Broadway St & 29th St	WBR	40.1356	44	0.595801586
Main St / Broadway St & 29th St	WBL	9.30401	11	0.532289512
Main St / Broadway St & 29th St	WBT	5.678	6	0.133254279
Main St / Broadway St & 29th St	NBL	1.14752	1	0.142365849
Main St / Broadway St & 29th St	SBL	13.0223	15	0.52836133
Main St / Broadway St & 29th St	NBT	189	198	0.646996639
Main St / Broadway St & 29th St	NBR	4	7	1.279204298
Main St / Broadway St & 29th St	Total	870.361	905	1.162610209
Main St & 28th St	NBT	288.545	286	0.150164752
Main St & 28th St	NBU	0	0	
Main St & 28th St	SBT	303.256	318	0.836583335
Main St & 28th St	SBR	3.66982	3	0.366786188
Main St & 28th St	NBL	0	0	
Main St & 28th St	EBL	3.31292	3	0.176131582
Main St & 28th St	EBR	3.43226	5	0.763516196
Main St & 28th St	EBT	2.28121	2	0.192204031
Main St & 28th St	Total	604.497	616	0.465652574
Broadway St & E 28th St	WBR	6.16313	7	0.326205896
Broadway St & E 28th St	WBL	3.85536	4	0.072982774
Broadway St & E 28th St	NBR	6.11237	1	2.711005024
Broadway St & E 28th St	NBT	187.134	198	0.783023573
Broadway St & E 28th St	SBL	0	0	
Broadway St & E 28th St	SBT	0	2	2
Broadway St & E 28th St	Total	205.546	211	0.377906795
Main St & 27th St	NBT	280.256	277	0.195056867
Main St & 27th St	NBR	1.70432	6	2.188668673
Main St & 27th St	SBT	268.409	282	0.819244903
Main St & 27th St	SBR	5.96482	4	0.880243526
Main St & 27th St	EBL	7.44122	8	0.201100645
Main St & 27th St	EBR	4.8665	7	0.875883008
Main St & 27th St	EBT	2.32005	2	0.217762561
Main St & 27th St	WBR	0.84802	1	0.158106993
Main St & 27th St	WBL	0	0	
Main St & 27th St	WBT	4.40946	4	0.199681234
Main St & 27th St	NBL	14.2144	15	0.205545997
Main St & 27th St	SBL	32.3137	37	0.796049099
Main St & 27th St	Total	622.748	642	0.765589934
Broadway St & E 27th St	EBT	10.45	13	0.744705349
Broadway St & E 27th St	EBL	4.08228	4	0.040930056
Broadway St & E 27th St	EBR	21.8057	28	1.241265204
Broadway St & E 27th St	WBT	3.71057	4	0.147408641

Broadway St & E 27th St	WBR	10.841	11	0.048119043
Broadway St & E 27th St	WBL	11.1955	13	0.518809988
Broadway St & E 27th St	NBR	3.09273	3	0.053130987
Broadway St & E 27th St	NBL	0.84802	1	0.158106993
Broadway St & E 27th St	NBT	178.323	185	0.495377722
Broadway St & E 27th St	SBL	0	0	
Broadway St & E 27th St	SBR	0.69889	0	1.182277463
Broadway St & E 27th St	SBT	5.43768	5	0.191589049
Broadway St & E 27th St	Total	250.486	268	1.087783248
Main St & Fourth Plain Blvd	NBT	207.1	210	0.200814957
Main St & Fourth Plain Blvd	WBR	14.1843	15	0.213532144
Main St & Fourth Plain Blvd	WBT	436.24	440	0.17964922
Main St & Fourth Plain Blvd	SBR	52.3882	59	0.885960933
Main St & Fourth Plain Blvd	SBT	163.868	174	0.779558947
Main St & Fourth Plain Blvd	EBR	38.9838	40	0.161712209
Main St & Fourth Plain Blvd	EBT	464.801	467	0.101862
Main St & Fourth Plain Blvd	WBL	92.7758	91	0.185252223
Main St & Fourth Plain Blvd	NBL	38.9838	42	0.47400407
Main St & Fourth Plain Blvd	NBR	73.1801	71	0.256761354
Main St & Fourth Plain Blvd	EBL	74.8904	74	0.103192198
Main St & Fourth Plain Blvd	SBL	57.0199	57	0.002633073
Main St & Fourth Plain Blvd	Total	1714.41	1739	0.591647727
Broadway St & E Fourth Plain Blvd	WBT	524.583	528	0.14892776
Broadway St & E Fourth Plain Blvd	WBR	51.3845	53	0.223614881
Broadway St & E Fourth Plain Blvd	EBT	572.742	580	0.302308958
Broadway St & E Fourth Plain Blvd	EBL	0	0	
Broadway St & E Fourth Plain Blvd	EBR	22.259	20	0.491446347
Broadway St & E Fourth Plain Blvd	NBL	18.6164	17	0.383029073
Broadway St & E Fourth Plain Blvd	NBR	78.9733	79	0.003007052
Broadway St & E Fourth Plain Blvd	NBT	130.879	138	0.614115301
Broadway St & E Fourth Plain Blvd	SBR	0	0	
Broadway St & E Fourth Plain Blvd	SBL	14.3988	16	0.410698027
Broadway St & E Fourth Plain Blvd	SBT	24.0401	25	0.193855288
Broadway St & E Fourth Plain Blvd	WBL	114.961	118	0.281623913
Broadway St & E Fourth Plain Blvd	Total	1552.84	1578	0.635965844

3. VISSIM MODEL DELAY

Study Intersection No.		2	3	4	5	6	7
Approach	**Movement**	**Main St & NE Hazel Dell Ave**	**Main St & NE 45th St**	**Main St & E 40th St**	**Main St & E 39th St**	**Main St & E 37th St / Safeway Drwy**	**Main St & E 33rd St**
NB	Left	18	56	4	38	2	25
	Through	-	5	6	23	0	12
	Right	0	-	4	12	4	6
	U-Turn	-	-	-	-	-	-
	Total	**3**	**9**	**6**	**23**	**1**	**13**
SB	Left	16	-	14	36	1	28
	Through	8	6	3	20	1	12
	Right	6	5	-	16	2	10
	U-Turn	-	-	-	-	-	-
	Total	**9**	**6**	**5**	**23**	**1**	**13**
EB	Left	-	68	26	36	10	27
	Through	29	-	23	25	10	17
	Right	9	8	8	21	6	6
	U-Turn	-	-	-	-	-	-
	Total	**12**	**53**	**18**	**27**	**9**	**20**
WB	Left	-	-	22	38	10	28
	Through	-	-	18	25	12	17
	Right	-	-	5	18	10	6
	U-Turn	-	-	-	-	-	-
	Total	**-**	**-**	**11**	**27**	**10**	**16**
	Total	**8**	**13**	**5**	**25**	**1**	**14**

Study Intersection No.		8	9	10	11	12	13	14
Approach	**Movement**	**Main St / Broadway St & 29th St**	**Main St & 28th St**	**Main St & 27th St**	**Main St & Fourth Plain Blvd**	**Broadway St & E 28th St**	**Broadway St & E 27th St**	**Broadway St & E Fourth Plain Blvd**
NB	Left	-	-	-	2	-	54	20
	Through	0	0	4	0	1	32	48
	Right	-	1	5	1	-	7	19
	U-Turn	-	-	-	-	-	-	-
	Total	**0**	**0**	**4**	**0**	**1**	**34**	**39**
SB	Left	3	-	0	2	-	53	25
	Through	4	2	-	7	2	35	42
	Right	4	2	-	5	-	28	-
	U-Turn	-	-	-	-	-	-	-
	Total	**4**	**2**	**0**	**6**	**2**	**36**	**39**
EB	Left	15	-	-	8	10	47	-
	Through	13	-	-	-	10	22	9
	Right	9	9	-	11	9	15	9
	U-Turn	-	-	-	-	-	-	-
	Total	**13**	**9**	**-**	**9**	**9**	**23**	**9**
WB	Left	-	-	6	-	8	47	10
	Through	13	-	-	8	8	13	11
	Right	5	-	4	-	5	11	8
	U-Turn	-	-	-	-	-	-	-
	Total	**7**	**-**	**5**	**8**	**7**	**18**	**10**
	Total	**4**	**2**	**4**	**5**	**6**	**26**	**17**

Study Intersection No.		2	3	4	5	6	7
Approach	**Movement**	**Main St & NE Hazel Dell Ave**	**Main St & NE 45th St**	**Main St & E 40th St**	**Main St & E 39th St**	**Main St & E 37th St / Safeway Drwy**	**Main St & E 33rd St**
NB	Left	15	45	-	53	2	38
	Through	19	5	3	31	1	18
	Right	0	-	4	28	3	12
	U-Turn	-	-	-	-	-	-
	Total	**4**	**8**	**3**	**33**	**1**	**18**
SB	Left	20	-	43	49	3	33
	Through	11	6	3	27	1	16
	Right	8	5	-	22	1	11
	U-Turn	-	-	-	-	-	-
	Total	**12**	**6**	**5**	**31**	**1**	**17**
EB	Left	-	38	44	51	10	30
	Through	30	-	33	30	12	16
	Right	8	4	8	25	5	8
	U-Turn	-	-	-	-	-	-
	Total	**11**	**29**	**30**	**35**	**10**	**22**
WB	Left	-	-	51	56	11	31
	Through	-	-	50	38	12	20
	Right	-	-	6	30	12	9
	U-Turn	-	-	-	-	-	-
	Total	**-**	**-**	**15**	**38**	**12**	**17**
	Total	**8**	**10**	**5**	**34**	**2**	**18**

Study Intersection No.		8	9	10	11	12	13	14
Approach	**Movement**	**Main St / Broadway St & 29th St**	**Main St & 28th St**	**Main St & 27th St**	**Main St & Fourth Plain Blvd**	**Broadway St & E 28th St**	**Broadway St & E 27th St**	**Broadway St & E Fourth Plain Blvd**
NB	Left	2	-	-	1	2	55	41
	Through	1	0	4	0	1	36	53
	Right	1	-	4	0	1	12	38
	U-Turn	-	-	-	-	-	-	-
	Total	**1**	**0**	4	1	1	**33**	47
SB	Left	4	-	-	3	-	55	12
	Through	3	1	0	2	0	39	44
	Right	3	1	-	2	-	25	-
	U-Turn	-	-	-	-	-	-	-
	Total	**3**	**1**	0	2	0	**39**	33
EB	Left	8	7	-	9	7	51	-
	Through	9	12	-	7	8	34	6
	Right	7	6	-	6	7	30	6
	U-Turn	-	-	-	-	-	-	-
	Total	**8**	**8**	-	8	7	**36**	6
WB	Left	9	-	6	-	6	60	19
	Through	11	-	-	7	7	15	15
	Right	5	-	5	7	6	10	12
	U-Turn	-	-	-	-	-	-	-
	Total	**6**	-	5	7	6	**22**	15
	Total	**2**	**1**	**4**	**1**	**3**	**32**	**17**

4. VISSIM MODEL QUEUE LENGTHS

INTERSECTION	MOVEMENT	STORAGE LENGTH (FT)[A]	AM PEAK		PM PEAK	
			Average Queue (ft)	95th-%ile Queue (ft)	Average Queue (ft)	95th-%ile Queue (ft)
MAIN ST & NE HAZEL DELL AVE	NBT	640	45	105	85	180
	SBT	1800	120	245	95	170
	EBT	2840	55	105	50	105
MAIN ST & 45TH ST	NBL	200	25	80	45	105
	NBT	1100	40	90	75	150
	SBT/R	640	140	325	80	165
	EBL	100	150	400	100	190
	EBR	240	20	40	20	40
MAIN ST & E 40TH ST	NBL	70	0	0	0	0
	NBT	350	50	105	55	140
	SBL	80	60	145	35	80
	SBT	1100	85	190	65	125
	EBT	160	20	40	30	80
	WBL	200	15	40	15	40
	WBT	430	20	40	25	60
MAIN ST & 39TH ST	NBL	70	25	60	100	245
	NBT/R	460	60	110	175	290
	SBL	70	125	250	105	185
	SBT/R	350	165	285	125	210
	EBL	130	55	110	110	195
	EBT/R	350	195	420	265	480
	WBL	130	90	290	35	85
	WBT/R	310	185	380	280	540
MAIN ST & E 37TH ST / SAFEWAY DRWY	NBT	1050	5	25	25	85
	SBT	460	0	10	5	35
	EBL	250	10	20	20	40
	WBT	180	20	40	25	60
MAIN ST & 33RD ST	NBL	50	15	45	30	105
	NBT/R	1050	45	85	125	250
	SBL	70	50	155	40	90
	SBT/R	1050	135	250	80	145
	EBL	70	25	60	55	110
	EBT/R	750	25	60	45	105
	WBL	70	20	45	30	65
	WBT/R	590	40	90	60	125
	NBL	80	0	0	0	0
	NBT	230	0	0	0	0

MAIN ST / BROADWAY ST & 29TH ST	NBR	240	0	0	0	0
	SBL	100	0	15	5	15
	SBR	1050	30	175	5	10
	EBT	410	10	30	20	45
	WBT	940	15	40	25	60
MAIN ST & 28TH ST	NBT	230	0	0	0	0
	NBL	60	0	0	0	0
	SBT	240	35	230	0	0
	EBT	320	0	20	10	25
MAIN ST & 27TH ST	NBL	70	0	15	5	20
	NBR	190	0	0	0	0
	SBL	100	10	60	10	50
	SBT	230	100	300	15	120
	EBT	240	10	25	15	25
	WBT	130	0	20	10	40
MAIN ST. & FOURTH PLAIN BLVD	NBL	90	20	60	45	105
	NBT	430	35	80	150	315
	NBR	120	5	40	30	75
	SBL	80	70	230	60	190
	SBT	200	215	290	155	290
	EBL	280	25	60	65	125
	EBT	480	160	295	350	750
	WBL	130	50	100	80	150
	WBT	190	120	265	145	290
BROADWAY ST & E 28TH ST	NBT	200	45	160	50	190
	EBT	55	0	0	0	0
	WBT	950	15	45	10	25
BROADWAY ST & E 27TH ST	NBT	180	0	0	5	60
	SBR	210	0	20	0	0
	EBT	120	70	125	35	90
	WBT	200	15	35	15	40
BROADWAY ST & E FOURTH PLAIN BLVD	NBT	920	70	150	180	315
	SBT	640	140	245	45	105
	EBT	1800	130	240	160	245
	WBL	2840	25	75	55	105
	WBT	200	145	285	245	505

5. VISSIM MODEL CONGESTION PLOTS

7:15 AM – 7:30 AM

7:30 AM – 7:45 AM

7:45 AM – 8:00 AM

8:00 AM – 8:15 AM

4:00 PM – 4:15 PM

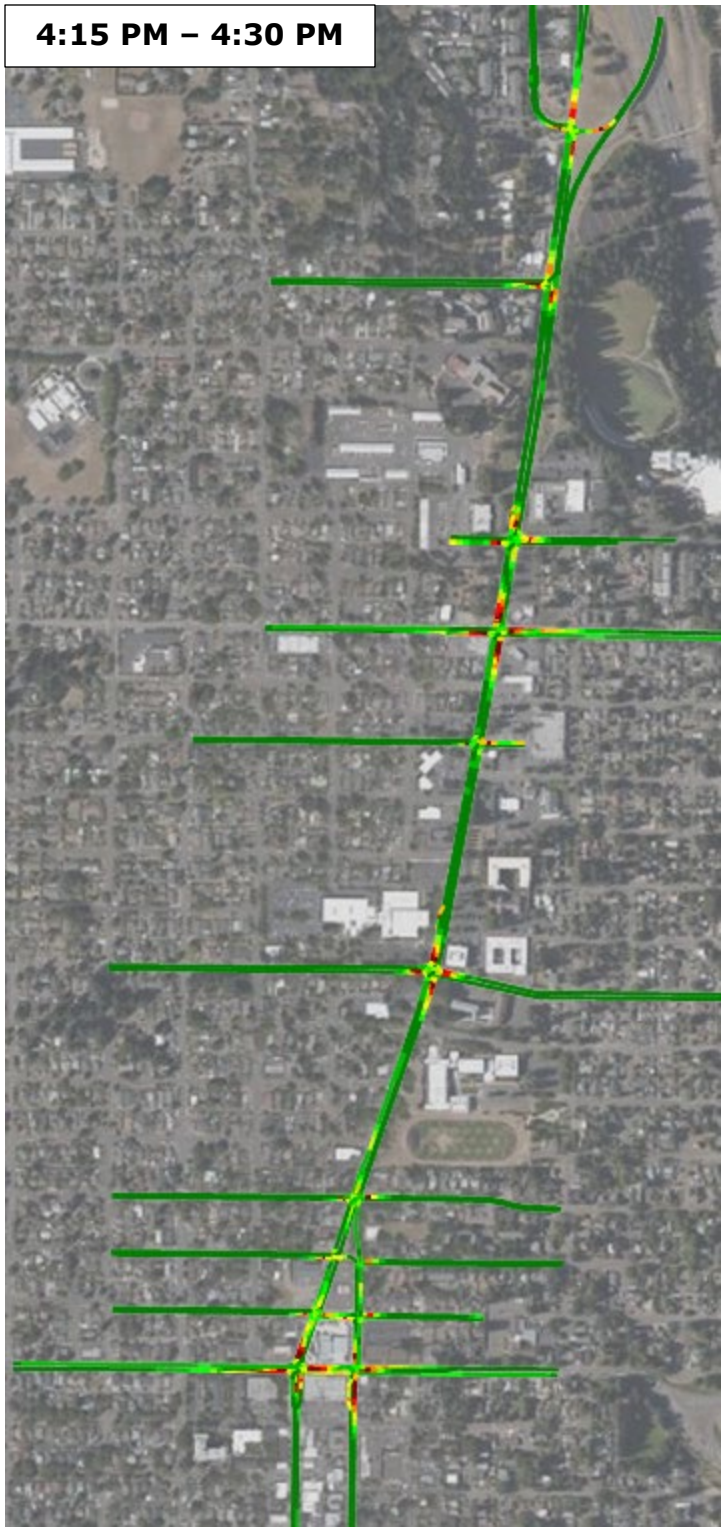
4:15 PM – 4:30 PM

4:15 PM – 4:30 PM

4:15 PM – 4:30 PM

6. STREETLIGHT DATA PLOTS

Streetlight Data

weekday AM 2022

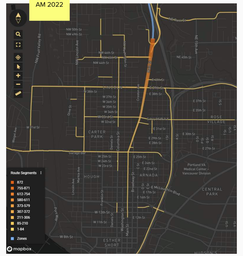

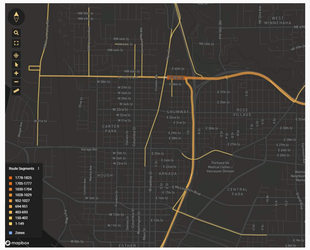

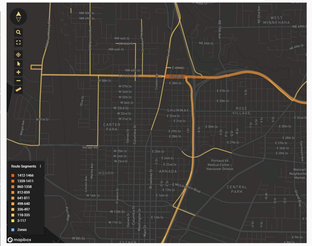

weekday AM 2019

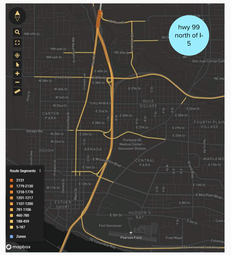

weekday PM 2019

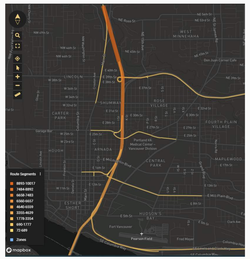

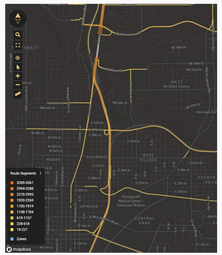

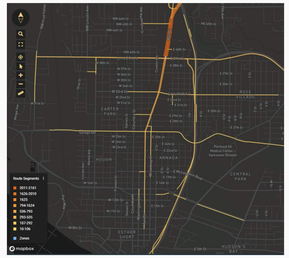

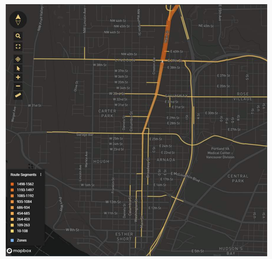

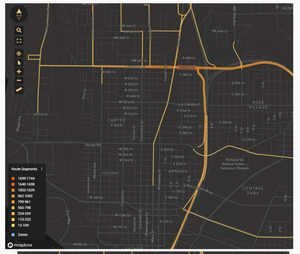

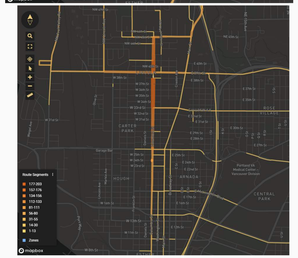

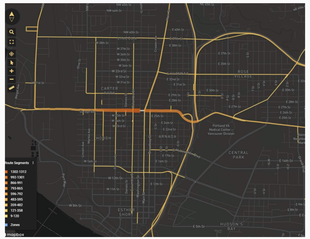

Model Data

weekday
AM 3 hr
2019

weekday
AM 1hr
2015

weekday
AM 2040

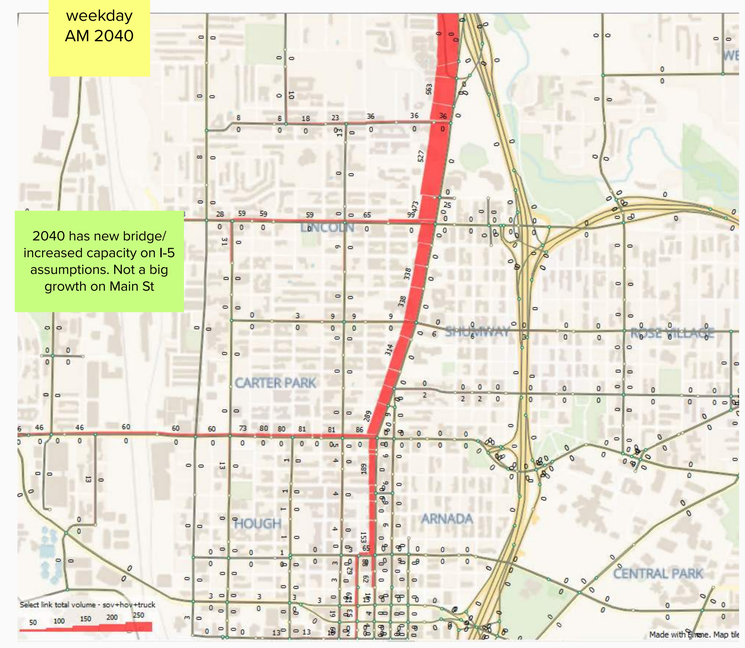

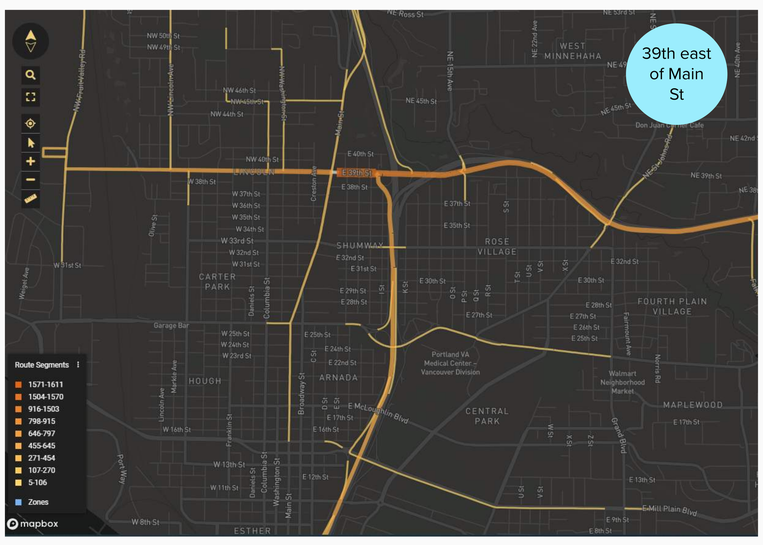

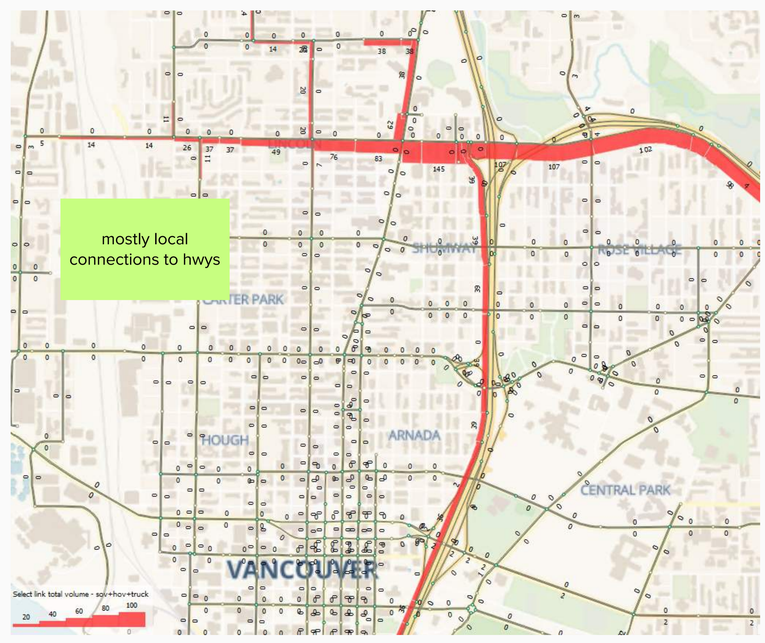

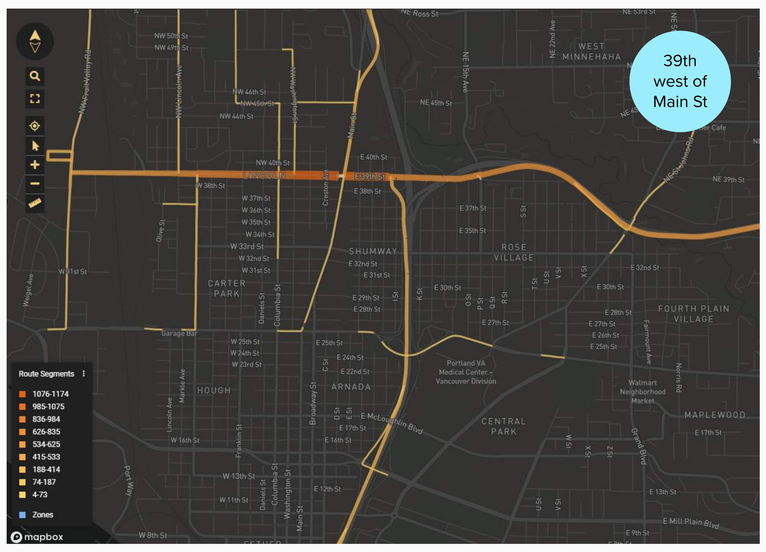

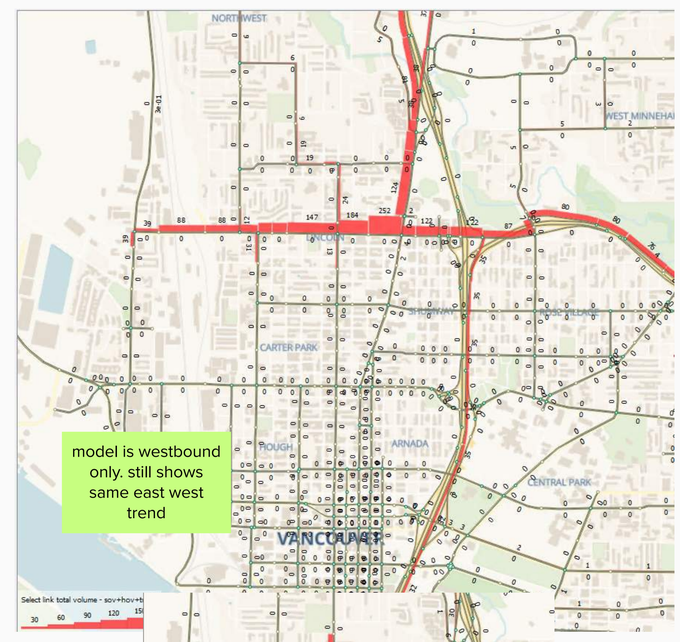

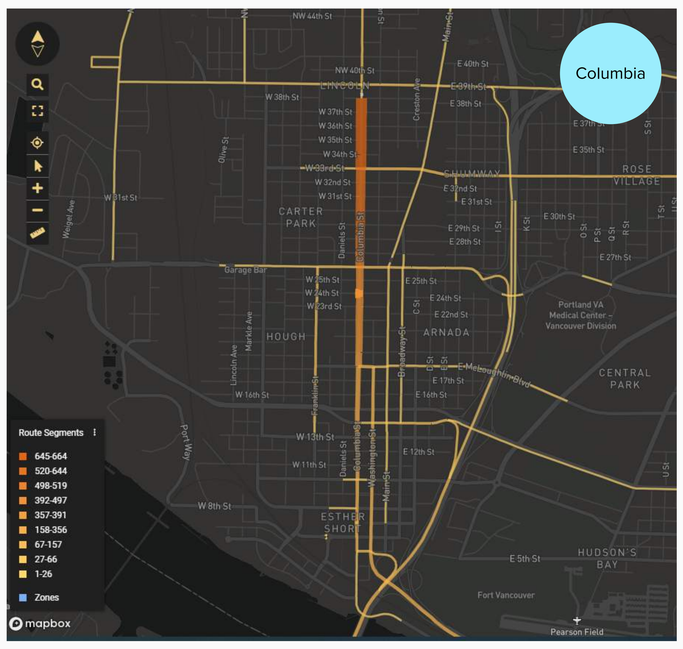

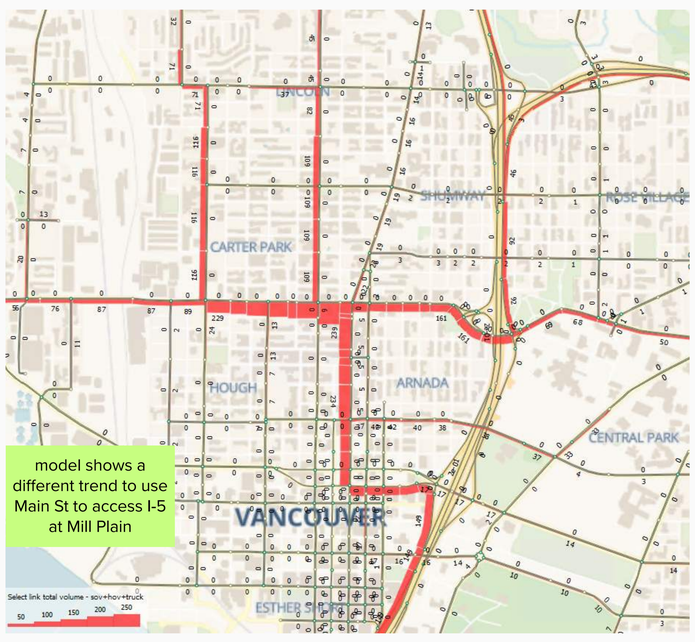

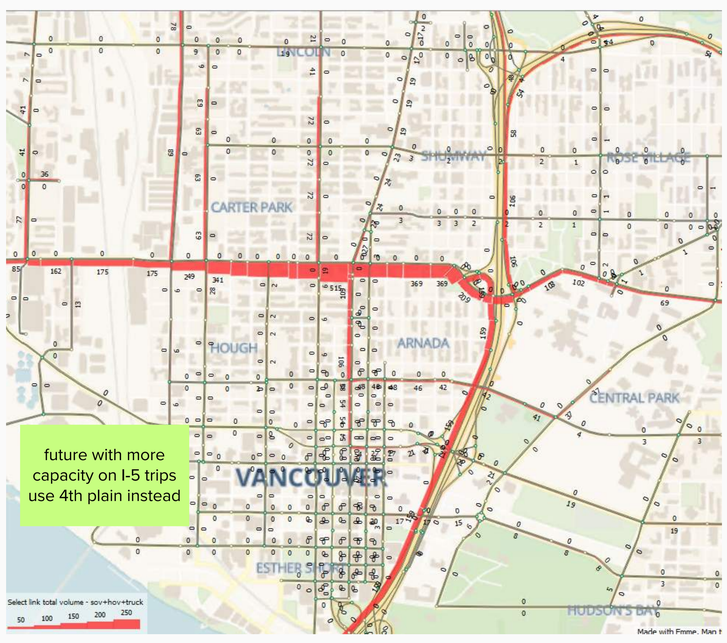

Model Comparisons

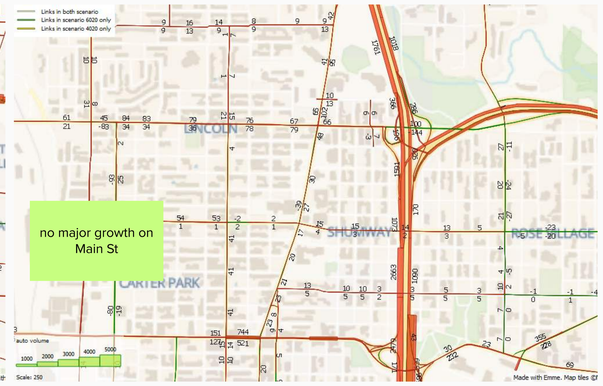

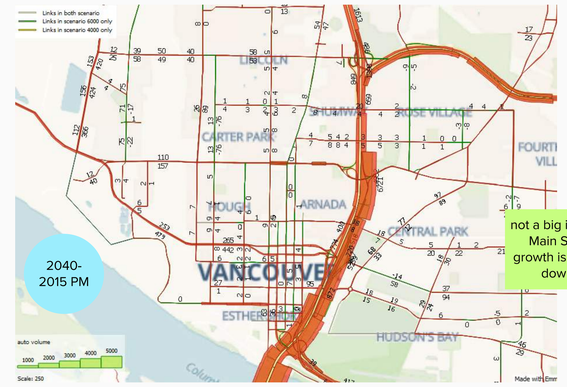

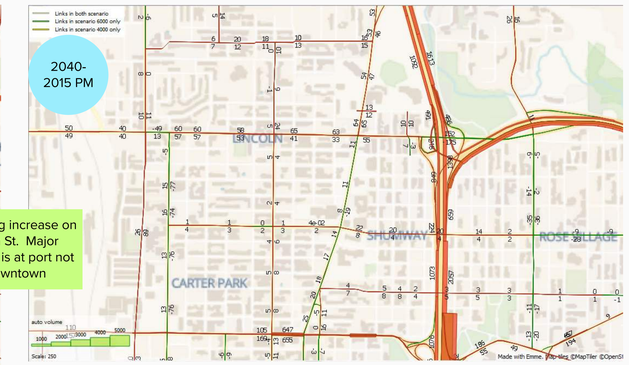

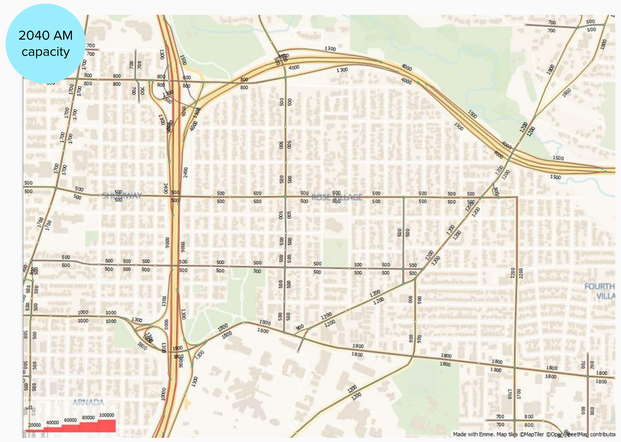

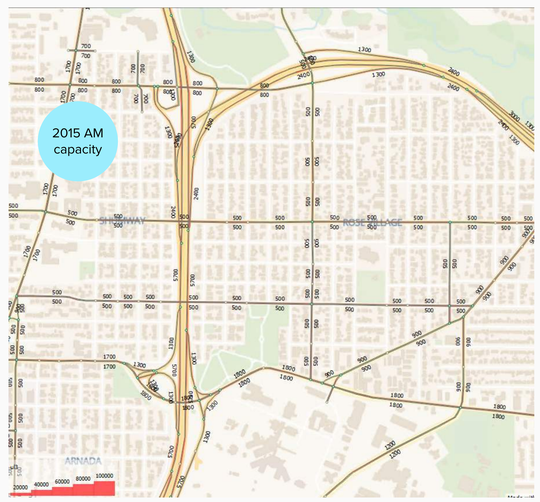

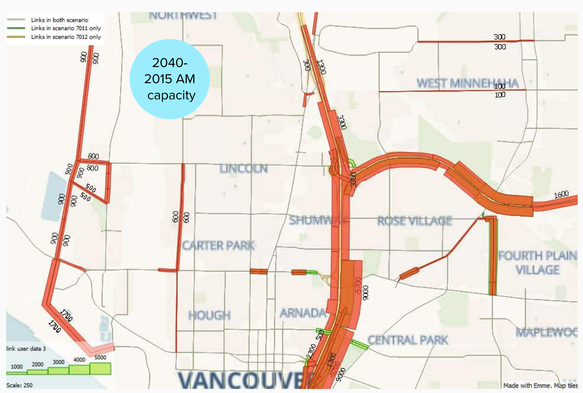

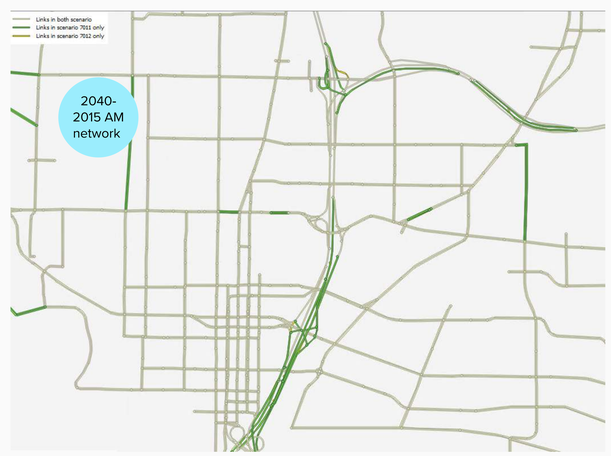

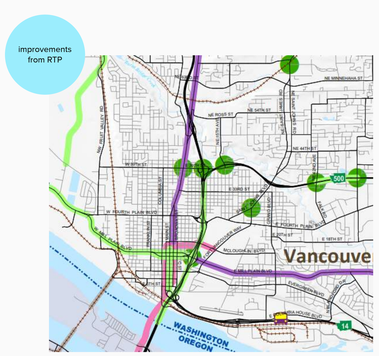

Trips	AM	PM
avg new trips	172	140
avg percent growth	26%	19%
percent growth per year	1.0%	0.8%

Main Street Promise Update

MAIN STREET PROMISE
Safe. Accessible. Connected.

Transportation Mobility Commission Workshop
August 1, 2023

CITY OF Vancouver WASHINGTON

Teresa Brum
Deputy Director, Economic Development

Ryan Lopossa
Streets & Transportation Manager

Jason Irving
Project Manager, Mackay Sposito

Monica Santos-Pinacho
Community Engagement, Point North

Julie Arenz
Business Mitigation Program

Will Grimm
Urban Design, First Forty Feet

Agenda

Introduction

Community Engagement

Business Mitigation & Engagement

Design Updates

CITY OF Vancouver WASHINGTON

MAIN STREET PROMISE
Safe. Accessible. Connected.

Project Overview

The case for Main Street:

- The roadway, sidewalks, and adjacent outdoor spaces on Main Street will be reconfigured to improve safety, foster a sense of community, and support economic prosperity.

Funding:

- American Rescue Plan Act (ARPA)
- City Transportation Fund
- Multi-family Tax Exemption Public Benefit
- Utility Fund
- City of Vancouver General Fund

CITY OF Vancouver WASHINGTON

MAIN STREET PROMISE
Safe. Accessible. Connected.

Project Goals and Guiding Principles

Goals

- Increase safety for people and vehicles
- Accessible to all
- Connected infrastructure
- Support Main Street businesses

Guiding Principles

- Honor and celebrate the history of downtown Vancouver
- Build upon existing, and establish new, partnerships with local businesses and the community
- Create a stronger sense of community identity and a welcoming place for Vancouver residents and visitors
- Create an environment for renewed businesses and property owners' investment
- Connect Main Street, Esther Short Neighborhood, the Waterfront and Fort Vancouver National Historic Site
- Create an attractive, coordinated and quality downtown environment that can be a model for future improvements

CITY OF Vancouver WASHINGTON

MAIN STREET PROMISE
Safe. Accessible. Connected.

Project Timeline

Q2 2022
Project kickoff

Business Engagement Begins

Q3 2022
Design Phase

Preliminary Design Begins

Open House #1

Project Advisory Group kickoff

Open House #2

Open House #3

Q4 2023
Estimated Design Completion

Q1 2024
Construction Phase

Coffee Corners begin

Block Captains kickoff

CITY OF Vancouver WASHINGTON

MAIN STREET PROMISE
Safe. Accessible. Connected.

Community Engagement Plan

In-person Public Open Houses
- Fall 2022, Spring 2023, Fall 2023

Project Advisory Group
- Representatives of diverse interests
- Launched January 2023

Boards & Commissions Engagement
- Historic Preservation Commission
- Culture, Arts & Heritage Commission
- Urban Forestry Commission
- Transportation & Mobility Commission

Social Media, Website, Online Public Survey

Monthly Downtown Stakeholder Forum Updates
- Monthly updates in an open, virtual forum

On-site Project Awareness Campaign
- Large signs conveying project information

Business Engagement

www.beheardvancouver.org

Community Engagement & Feedback

Open House 1 – November 30, 2022:

- Encouraged to ***"THINK BIG"***
- "Welcoming visitors & supporting Main Street businesses" ranked most important project objective
- "Encourage community gathering on Main Street and utilization of outdoor space" highlighted as the best way to welcome visitors
- Asked to "***prioritize pedestrian experience***" & accommodate accessible movement for people with mobility or visibility challenges – "***go curbless***"

CITY OF Vancouver WASHINGTON

MAIN STREET PROMISE
Safe. Accessible. Connected.

Community Engagement & Feedback

Open House 2 - June 8, 2023

- **70%** of commenters ***expressed support & excitement*** for the project.
- "Curbless design and width of sidewalks and integrating art throughout the city - ***great plans!"***
- Excited about the ***expanded opportunities for outdoor*** seating and other uses in the building zone & furnishing zone.
- Participants welcome revitalization of this corridor and ***look forward to the economic and social benefits*** to come.

CITY OF Vancouver WASHINGTON

MAIN STREET PROMISE
Safe. Accessible. Connected.

Project Advisory Group members

- **Adam Hendrix**, Union Chapel
- **Cliff Myers**, Visit Vancouver USA
- **Dean Irvin**, Property Owner
- **Diana Kirkpatrick**, Center Stage Clothiers
- **Earl Frederick**, Clark College Culinary Arts
- **Elise Chelak**, Pahlisch Commercial
- **Holly J. Williams**, Parks Commissioner
- **Janet Kenefsky**, Greater Vancouver Chamber
- **Jill D. Stryker**, Property Owner
- **Karen Knauss**, LSW Architects
- **Kimberly Quiroz**, Hispanic Metropolitan Chamber
- **Marianne Wilson Stein**, Dandelion Teahouse & Apothecary
- **Meghan Arntson**, Albina Fuel
- **Michael Lary**, Source Gym
- **Seanette Corkill**, Frontdoor Back

CITY OF Vancouver WASHINGTON

MAIN STREET PROMISE
Safe. Accessible. Connected.

Engagement with Public Boards and Commissions

- Vancouver Accessibility Task Force
- Transportation and Mobility Commission
- Historic Preservation Commission
- Culture, Arts & Heritage Commission
- Urban Forestry Commission
- Parking Advisory Committee
- Vancouver's Downtown Association
- Vancouver's Downtown Association Design Committee
- Uptown Village Business Association
- Arnada Neighborhood
- Esther Short Neighborhood
- NE Hazel Dell Neighborhood Association
- SW Small Business Providers Consortium
- Vancouver Farmer's Market Board
- Downtown Stakeholders forum
- Visit Vancouver Board
- Columbia River Economic Development Council
- Cycle Vancouver Club
- WA State School for the Deaf
- WA State School for the Blind

CITY OF Vancouver WASHINGTON

MAIN STREET PROMISE
Safe. Accessible. Connected.

How to Stay Informed

Stay Informed
Subscribe for Main Street updates

- See the latest project updates at **beheardvancouver.org/MainStreetPromise**
- Attend the **Stakeholders Forum** the 3rd Tuesday each month, 1:00-2:00 pm
- Check out the **Project Advisory Group meetings** at **beheardvancouver.org/MainStreetPAG**
- **Email** the Project Team at **smallbusiness@cityofvancouver.us**
- Stay tuned for details of the **next open house this fall!**

CITY OF Vancouver WASHINGTON

MAIN STREET PROMISE
Safe. Accessible. Connected.

Business Mitigation Program

- Created a new program for the City of Vancouver
  Program elements:
    1. Data Collection
    2. Awareness & Expectations
    3. Listen
    4. Personal, Inclusive & Accessible
    5. Business Assistance
- Implementation is being done in partnership with VDA
- Business engagement in partnership with VDA and other small business providers
- Sets the stage for Interstate Bridge Replacement Project

CITY OF Vancouver WASHINGTON

MAIN STREET PROMISE
Safe. Accessible. Connected.

1. Data Collection

Collect data to determine:

- Businesses
- Business types
- Property owners
- Residents

Map the data:

- Understand each business location needs

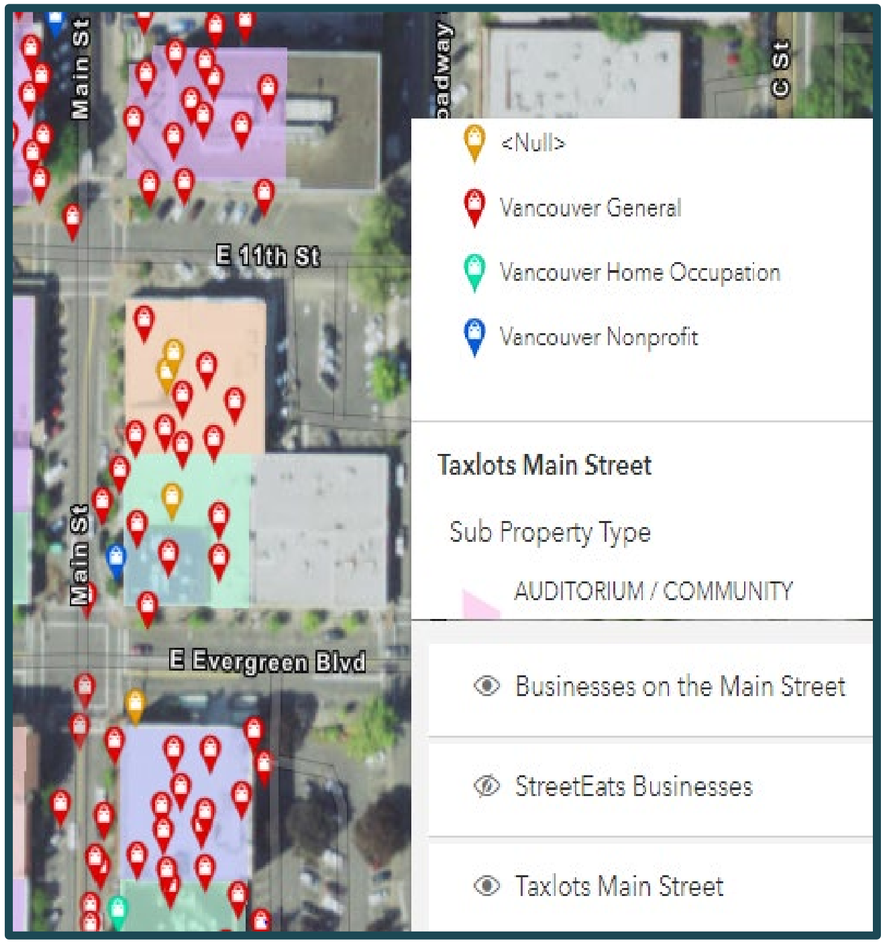

CITY OF Vancouver WASHINGTON

MAIN STREET PROMISE
Safe. Accessible. Connected.

2. Create Awareness & Set Expectations

- Saturated awareness and generate interest in advance
- Create easily accessible content and proactively share information widely, to all audiences
- Anticipate and address project objections
- Create and share project phases and timelines
- Host Stakeholder, kick-off, informational meetings, coffee chats, ribbon-cuttings and open house events
- Provide project information in one location - Be Heard

CITY OF Vancouver WASHINGTON

MAIN STREET PROMISE
Safe. Accessible. Connected.

3. Listen

- Business liaison as the single point of contact for construction-related questions
- Dedicated contact between businesses and construction team with a single phone number and email address
- Offer Be Heard surveys
- Create a diverse Design Project Advisory Group (PAG) with business owners, property owners, workers, and residents

CITY OF Vancouver WASHINGTON

MAIN STREET PROMISE
Safe. Accessible. Connected.

4. Make it Personal, Inclusive & Accessible

- Create Block Captains
- Be helpful, share resources
- Create accessible and inclusive wayfinding signage
- Obtain business testimonials that share project benefits and concerns
- Create “contractor specials” to motivate project workers to dine/shop downtown

CITY OF Vancouver WASHINGTON

MAIN STREET PROMISE
Safe. Accessible. Connected.

5. Business Assistance

- Create customer engagement opportunities
- Create social media posts, videos, and “shout outs” for businesses and owners
- Create project expert videos, like “Meet the Contractor”
- Create grant opportunities, education sessions, and grant-finding solutions

CITY OF Vancouver WASHINGTON

MAIN STREET PROMISE
Safe. Accessible. Connected.

Business Mitigation Program - Summary

New. Replicable. Community Centric. Business Friendly.

1. Data Collection
2. Create Awareness & Set Expectation
3. Listen
4. Make it Personal, Inclusive & Accessible
5. Business Assistance

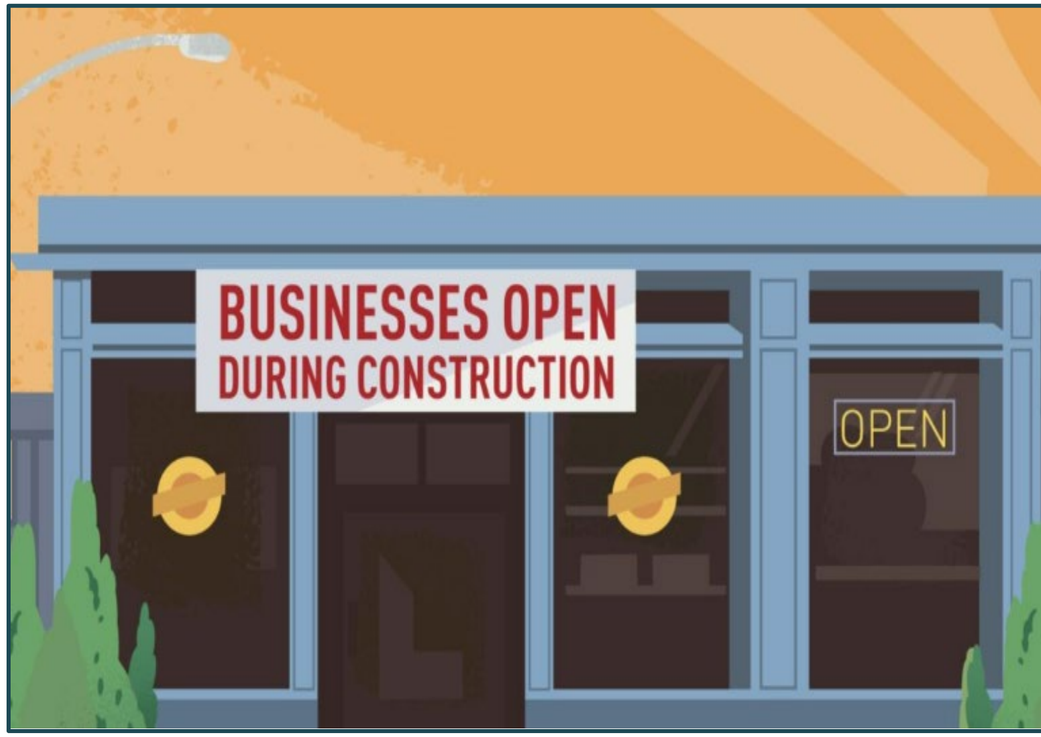

CITY OF Vancouver WASHINGTON

MAIN STREET PROMISE
Safe. Accessible. Connected.

Design Elements & Improvements

Safe: A safe environment for walking, biking, rolling and driving.

Parallel Parking

Enhanced Intersections and Crosswalks

LED Lighting

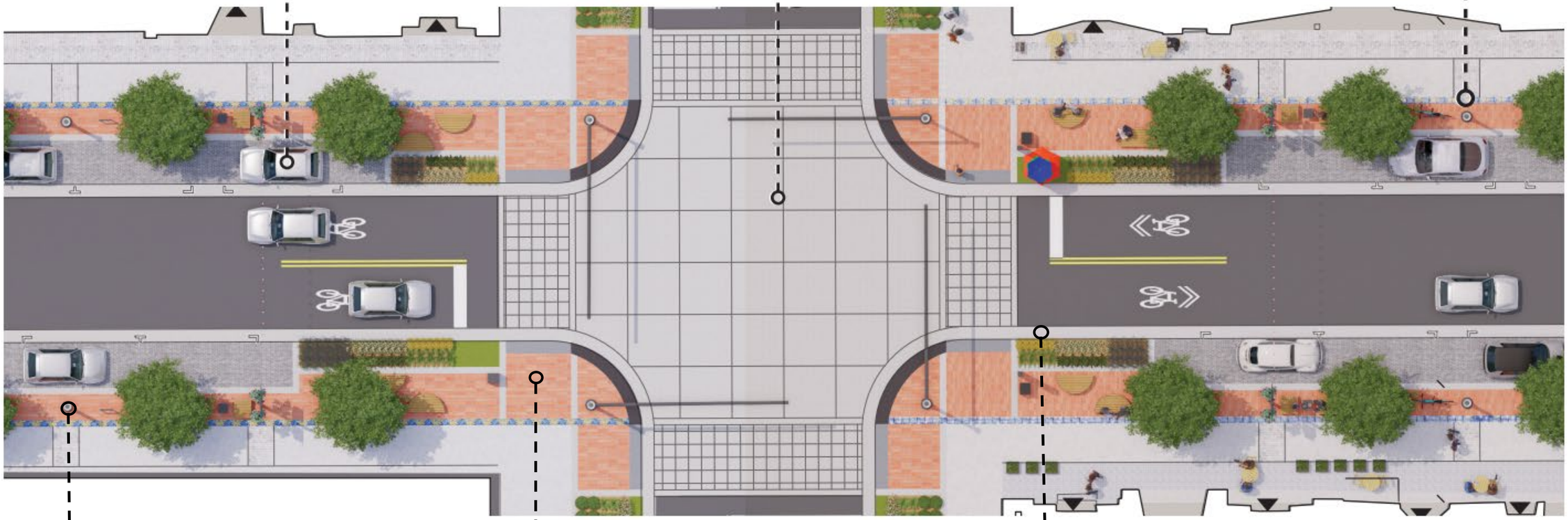

Pedestrian Scale Lighting

Extended Sidewalks

Curbless Condition

MAIN STREET PROMISE
Safe. Accessible. Connected.

NACTO* Design Guidance

A safe environment for walking, biking, rolling and driving.

*National Association of City Transportation Officials

NACTO Contextual Guidance for Selecting All Ages & Abilities Bikeways				Recommended Facility Type
Roadway Context				
Motor Vehicle Speed	Motor Vehicle Volume (ADT)	Motor Vehicle Lanes	Considerations	
Any		Any	High curbside activity, frequent buses, motor vehicle congestion, or turning conflicts	Protected Bicycle Lane
< 10 mph	Less relevant	No centerline, or single lane one-way	Pedestrians on the roadway	Shared Street
≤ 20 mph	≤ 1,000 – 2,000		< 50 motor vehicles /hr in the peak direction at peak hr	Bicycle Boulevard
≤ 25 mph	≤ 500 – 1,500		Low curbside activity, or low congestion pressure	Conventional or Buffered Bicycle Lane, or Protected Bicycle Lane
	≤ 1,500 – 3,000	Single lane each direction, or single lane one-way		Buffered or Protected Bicycle Lane
	≤ 3,000 – 6,000			Protected Bicycle Lane
	> 6,000			
	Any	Multiple lanes per direction		
Greater than 26 mph	≤ 6,000	Single lane each direction		Protected Bicycle Lane, or Reduce Speed
		Multiple lanes per direction		Protected Bicycle Lane, or Reduce to Single Lane & Reduce Speed
	Greater than 6,000	Any	Any	Protected Bicycle Lane
High-speed limited access roadways, natural corridors, or geographic edge conditions with limited conflicts		Any	High pedestrian volume	Bike Path with Separate Walkway or Protected Bicycle Lane
			Low pedestrian volume	Shared-Use Path or Protected Bicycle Lane

TSP Policy Guidance

Density Targets for low stress facilities

As part of the City's Transportation System Plan update that is currently in its final phases, Council has endorsed a policy for the Low Stress Mobility Network that aims for a low stress facility every half mile.

Low-Stress	**LS 1**	**Key Policy **********	**Low-Stress Mobility Network**	**Adopt a city-wide low-stress long-term mobility network that prioritizes safety and comfort for people of all ages. This network is a subset of the city's larger mobility network consisting of lower-stress facilities such as neighborhood greenways and shared-use paths. The density targe for low-stress facilities is every half-mile.**

BUILD LOW-STRESS NETWORKS

Make the walking, bicycling and small mobility networks inviting for all ages and abilities.

The BSM network today consists of lower-stress neighborhood streets isolated by higher-stress collector and arterial streets. This makes it challenging to bike outside of a neighborhood. Sidewalks are missing on nine miles of arterial streets – the fastest and most daunting places to walk. Adopting a citywide low-stress network for BSM and walking must be complemented by policies and programming (wayfinding, education) that further incentivize use of the networks.

MAIN STREET PROMISE
Safe. Accessible. Connected.

Design Elements & Improvements

Accessible: An accessible destination to meet, gather, shop and dine.

On-Street Parallel Parking

Curbless Condition

Tactile Guidance

Wider Sidewalks

MAIN STREET PROMISE
Safe. Accessible. Connected.

Design Elements & Improvements

Connected: A connected Main Street with links to downtown destinations.

Key Routes

Downtown Loop

Gateways

CITY OF Vancouver WASHINGTON

MAIN STREET PROMISE
Safe. Accessible. Connected.

Where are we at now? Next Steps

Community and Business Engagement

- Open House (Fall 2023)
- Social Media, Website, Online Public Surveys (ongoing)

Business Mitigation and Engagement

- One on One Business Engagement (ongoing)
- Block Captains (Fall 2023)
- Coffee Corner (Q4 2023)

CITY OF Vancouver WASHINGTON

MAIN STREET PROMISE
Safe. Accessible. Connected.

Where are we at now? Next Steps

Design

- 90% Design (Estimated Completion: Q3 2023)
- Final Design (Estimated Completion: Q4 2023)

RFQ Release for Bid

- (TBD)

Construction

- Construction Begin Q1 2024

CITY OF Vancouver WASHINGTON

MAIN STREET PROMISE
Safe. Accessible. Connected.

Thank you!

To learn more, visit www.beheardvancouver.org/MainStreetPromise

CITY OF Vancouver WASHINGTON

MAIN STREET PROMISE
Safe. Accessible. Connected.

McGillivray Boulevard Safety & Mobility Project

Transportation and Mobility Commission
August 1, 2023

CITY OF Vancouver WASHINGTON

Emily Benoit, Senior Transportation Planner, CDD
Kara Hall, Consultant Project Manager, Fehr & Peers

Agenda

Policy Alignment and Meeting Purpose

Design Options Discussion

Next Steps

CITY OF Vancouver WASHINGTON

City Council Priorities

Safety, Equity and Climate

- Provide a safe, accessible street system that benefits all users, ages, and abilities, regardless of how they choose to travel.
- Help protect and benefit all who use the public right-of-way by reducing serious injuries, decreasing negative environmental impacts, promoting healthy living, and advancing the well-being of all in Vancouver.

CITY OF Vancouver WASHINGTON

Strategic Plan Alignment

Livability

- Being safe and feeling comfortable in public spaces and places.
- Abundant opportunity to access and engage in core community resources including natural resources, transportation, health care, education, cultural experiences, and art.

Sustainability and Resiliency

- Using a proactive and goal-oriented approach
- Learning from past experiences and taking in new information

Innovation

- Actively pursuing new opportunities
- Committing to collaboration
- Collecting, processing, and analyzing data, then acting on insights

Equity and Inclusion

- Ensuring accessible, inclusive, and sustainable access to resources and opportunities for those with disabilities

Trust and Relationships

- Strong partnerships and community engagement
- A government that demonstrates openness and provides accurate and unambiguous information

CITY OF Vancouver WASHINGTON

Purpose & Outcome

Purpose

- Present three design options for McGillivray Boulevard.
- Share feedback from community conversations on design options.

Target Outcome

- Gather input on design options to inform the next phase of design and selection of a preferred design option.

CITY OF Vancouver WASHINGTON

Phase 2: Develop Design Options

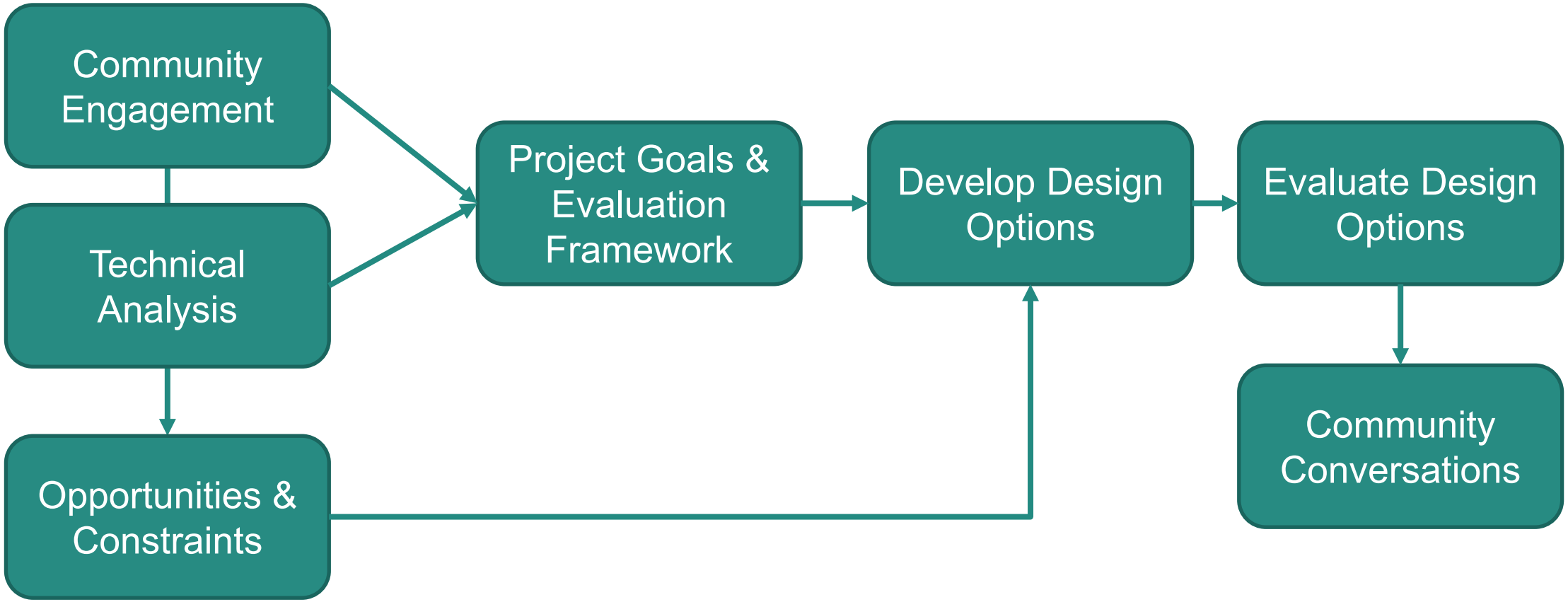

CITY OF Vancouver WASHINGTON

Phase 2: Project Goals

Lower Vehicle Speeds

Lower vehicle speeds on the corridor to improve safety for all users regardless of how they travel and to reduce cut-through traffic to support the neighborhood context.

Improve Safety & Comfort

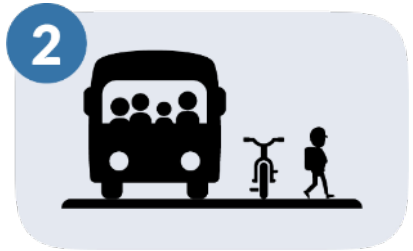

Make the corridor safe and comfortable for people of all ages and abilities to walk, bike, roll, use small mobility devices, and access transit.

Improve Intersections & Crossings

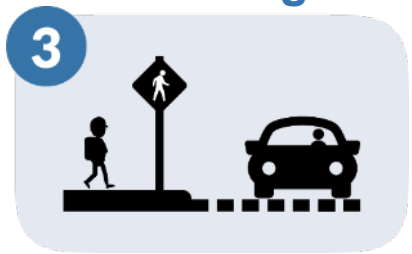

Improve safety and comfort at intersections and crossings on the corridor.

CITY OF Vancouver WASHINGTON

Design Option 1:
Parking Separated Mobility Lane

CITY OF Vancouver WASHINGTON

Design Option 1:
Parking Separated Mobility Lane

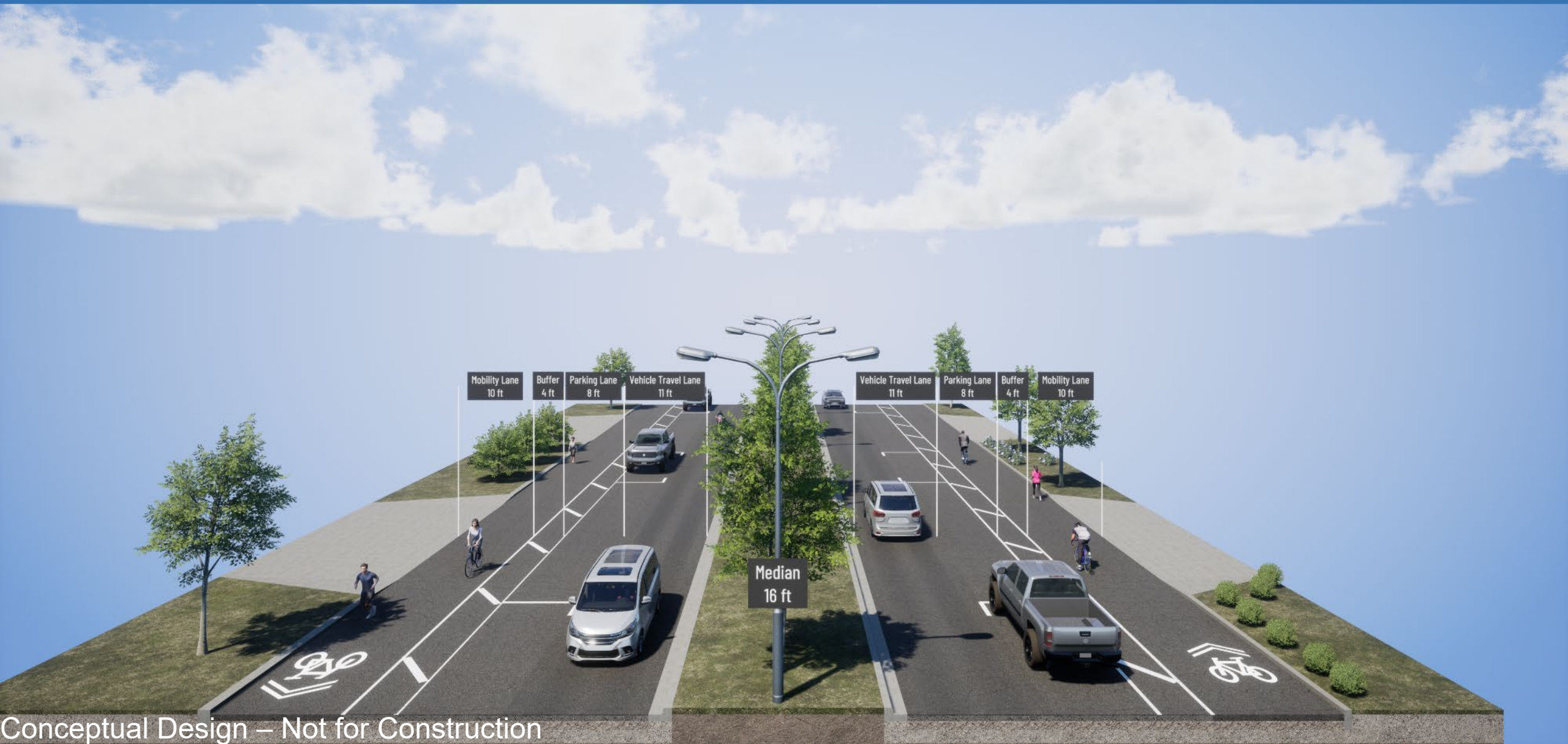

Conceptual Design – Not for Construction

Design Option 1: Parking Separated Mobility Lane SE 136th Avenue

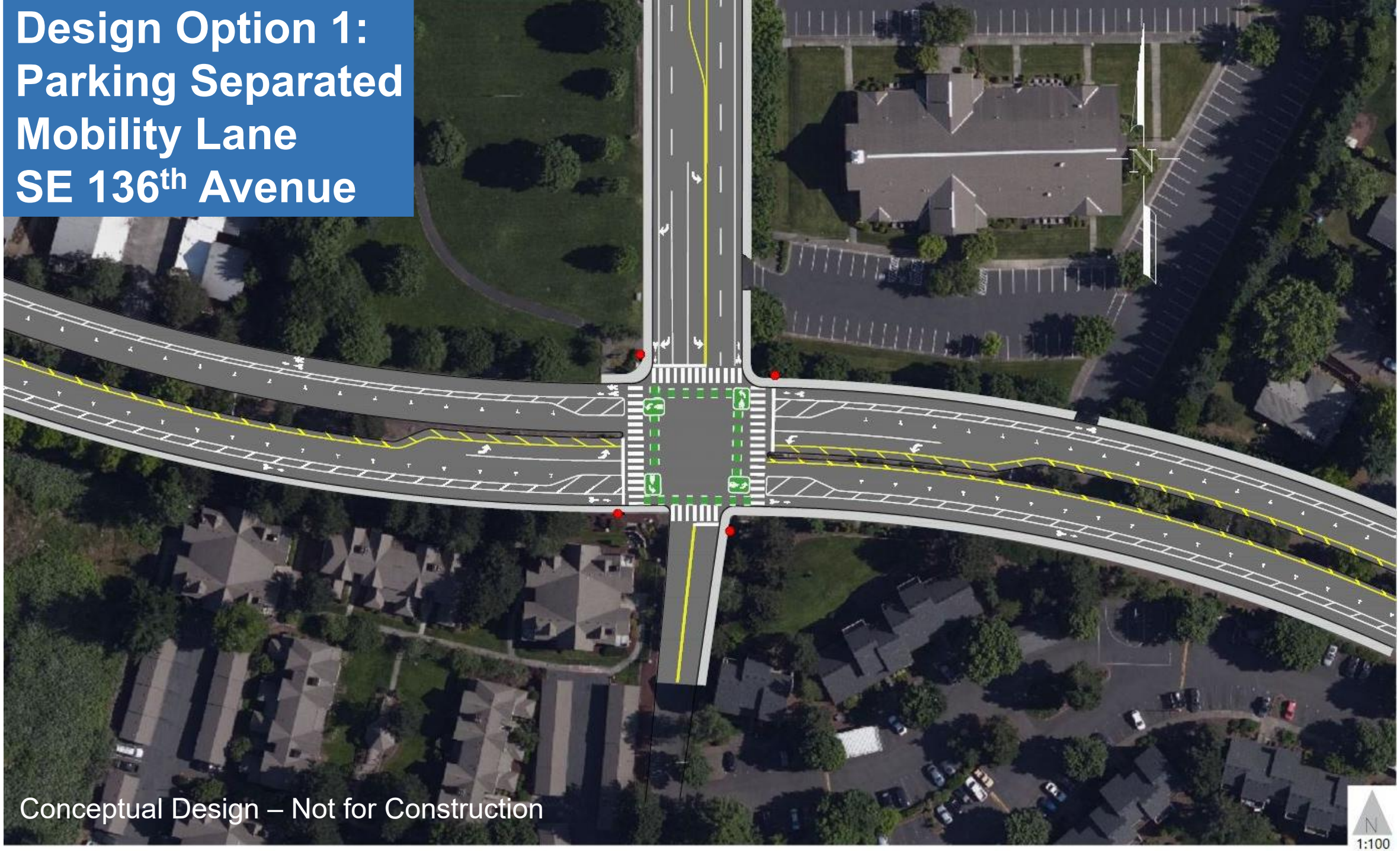

Conceptual Design – Not for Construction

Design Option 1: Parking Separated Mobility Lane SE Village Loop

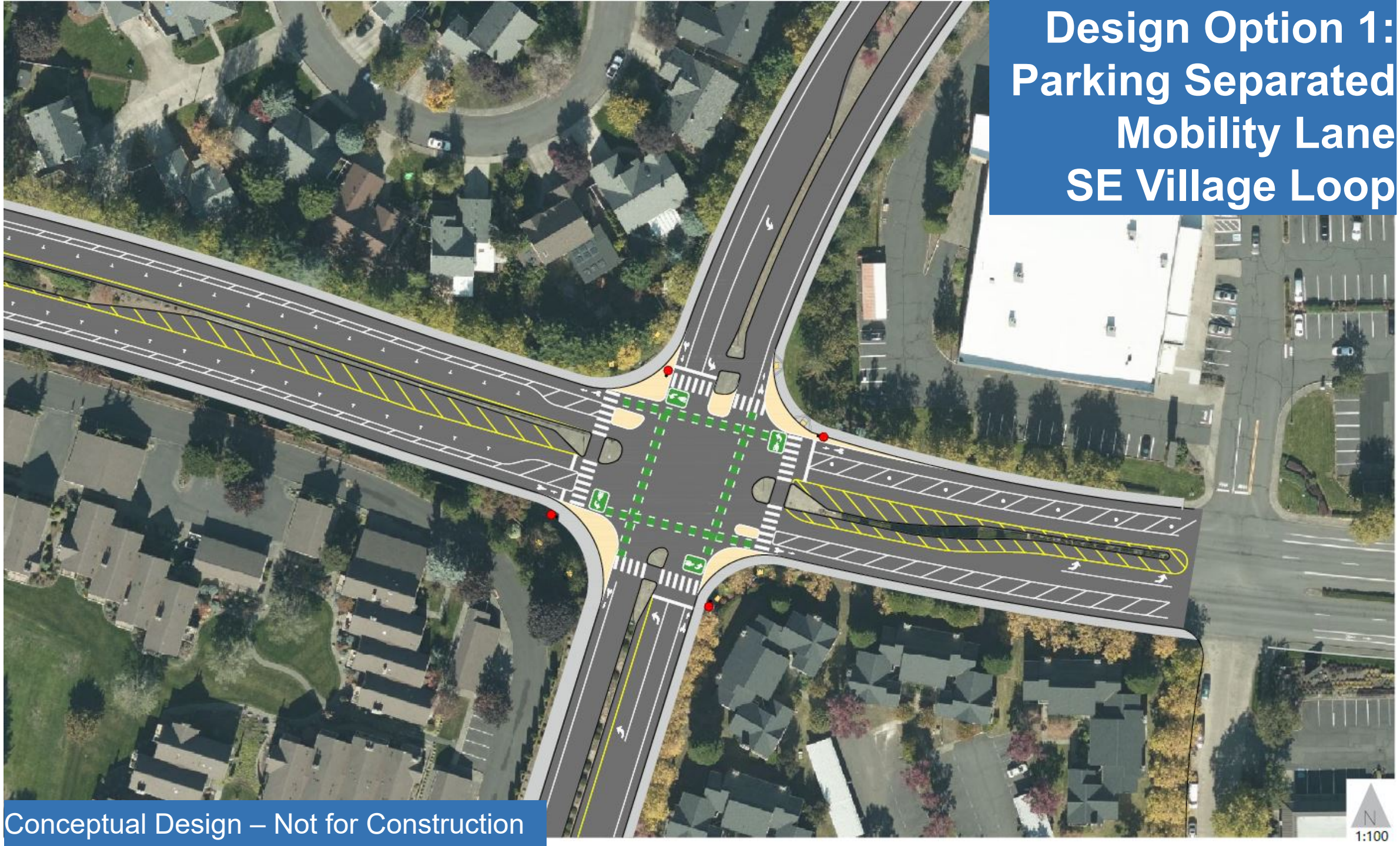

Conceptual Design – Not for Construction

Design Option 1: Parking Separated Mobility Lane

Benefits:	Challenges:
• Physically separated space for mobility lane. • Maintains most on-street parking. • Increases comfort for people using the mobility lane. • Perceived narrowing of roadway will help to lower vehicle speeds.	• Parking is under-utilized; reduces effectiveness of narrowing. • Driveway access causes breaks in the buffer and conflicts with mobility lane. • Concern from avid bicyclists about being trapped in mobility lane. • Breaks in parking separated buffer could result in vehicles parking/driving in mobility lane. • May require restricting U-Turns at some intersections.

CITY OF Vancouver WASHINGTON

Design Option 2:
Center Running Mobility Lane

CITY OF Vancouver WASHINGTON

Design Option 2:
Center Running Mobility Lane

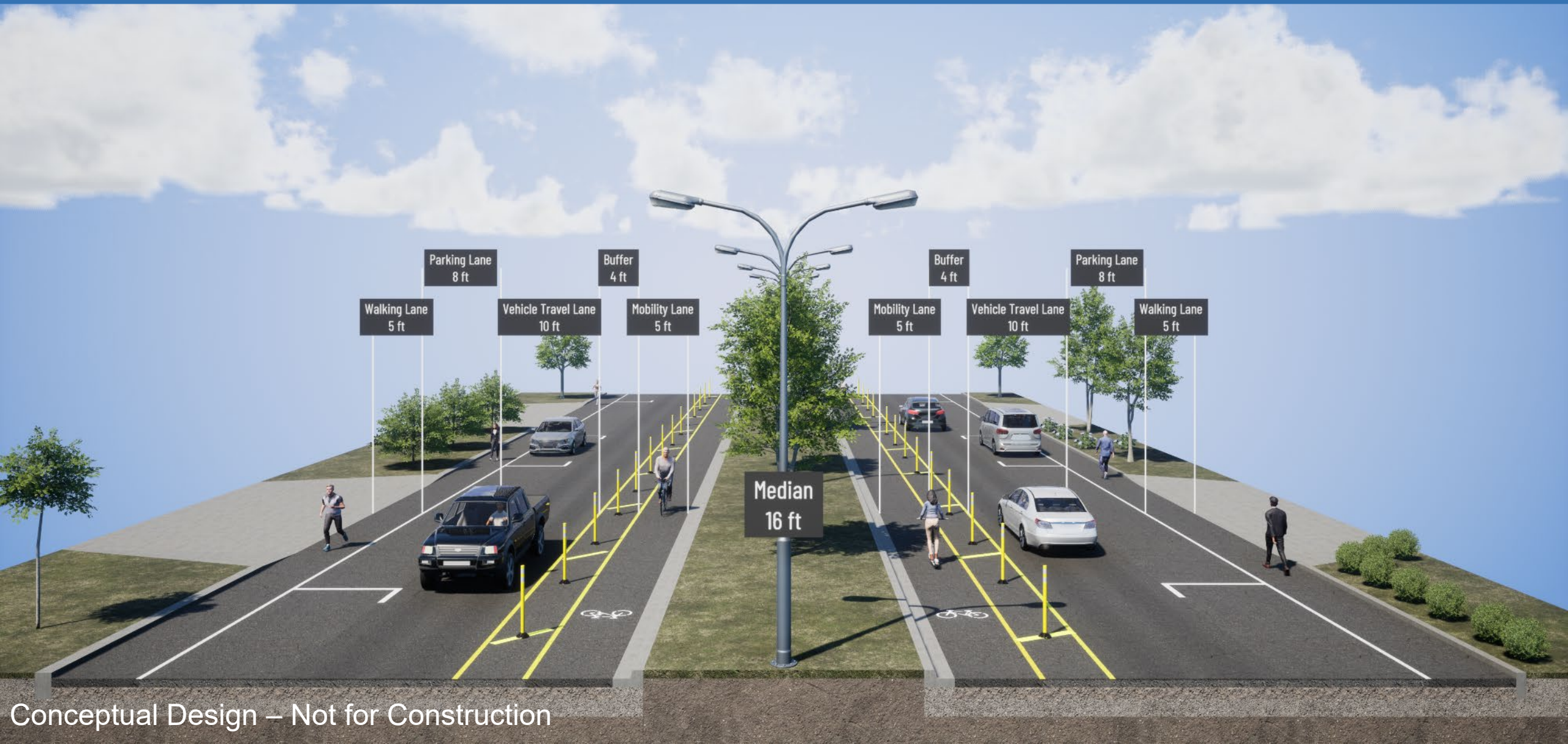

Conceptual Design – Not for Construction

Design Option 2: Center Running Mobility Lane SE 136th Avenue

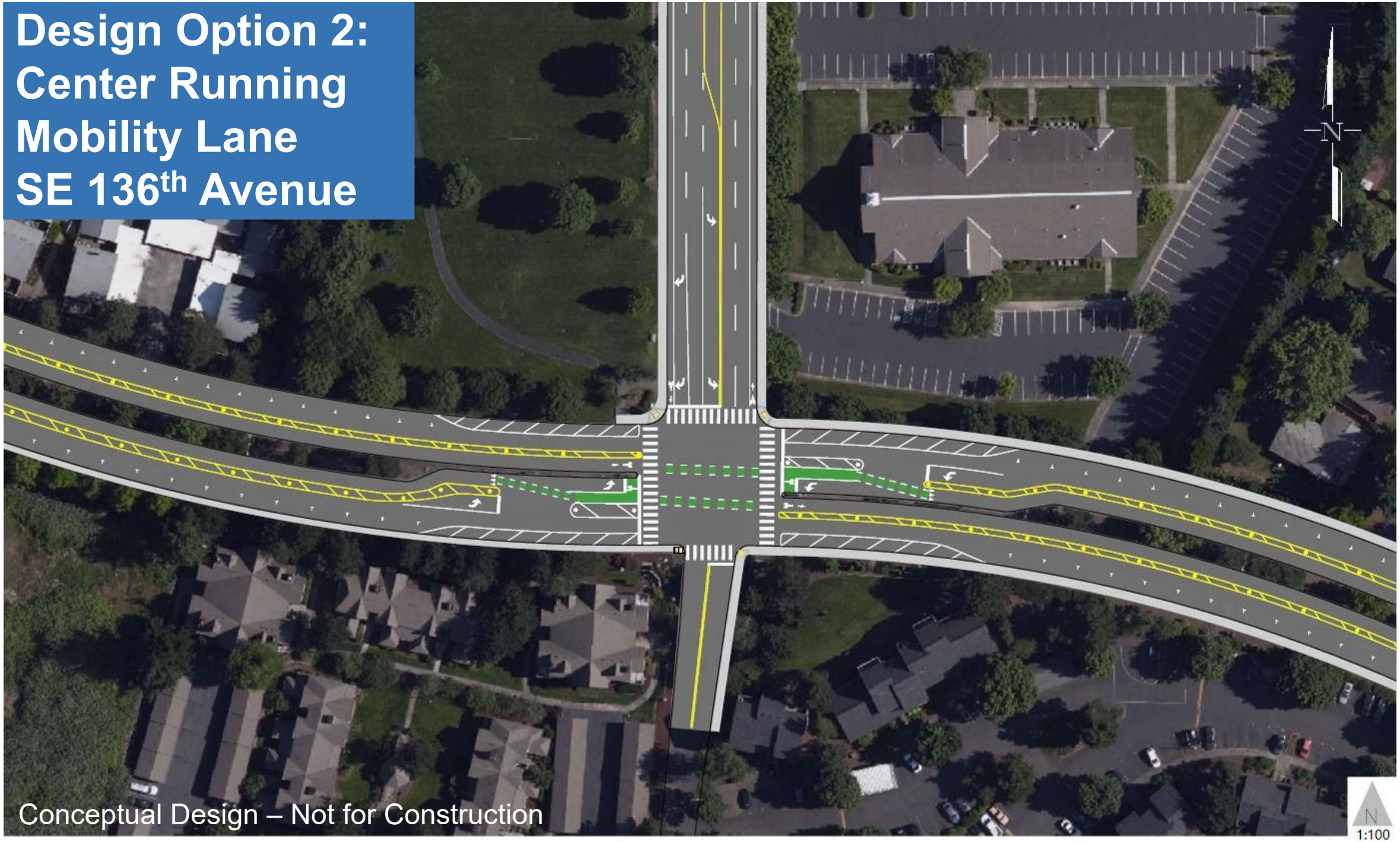

Conceptual Design – Not for Construction

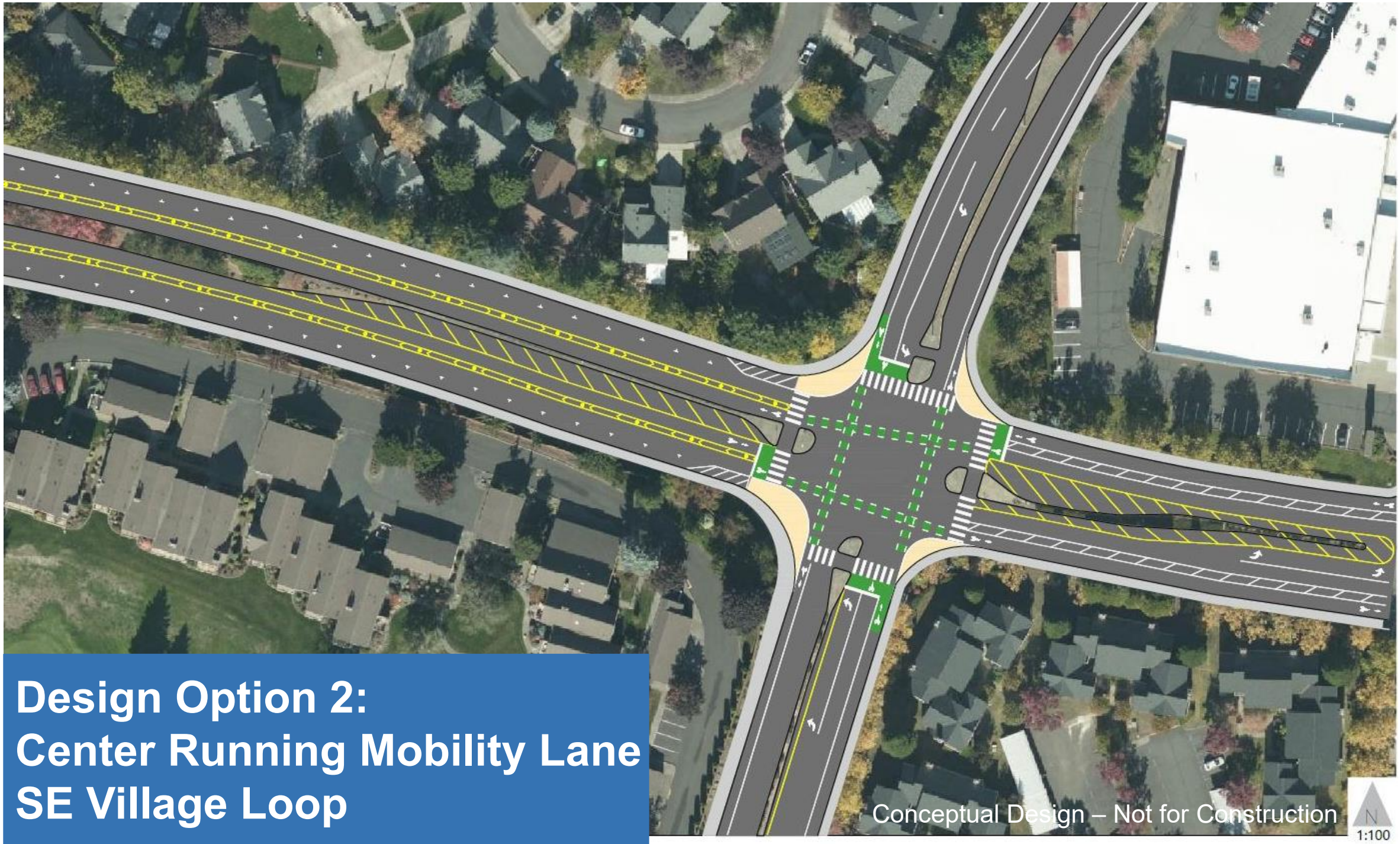

Design Option 2:
Center Running Mobility Lane
SE Village Loop

Design Option 2: Center Running Mobility Lane

Benefits:	Challenges:
• Eliminates driveway and parking lane conflict points with the mobility lane. • Limits removal of on-street parking to intersection approaches. • Allows for continuous buffer separating the mobility lane and vehicle travel lane. • Creates separated space for people walking and people using the mobility lane. • Makes left-turns easier for people using the mobility lane.	• Non-standard configuration will require education and may be confusing for people who don't use the corridor regularly. • Likely to require restricting U-turns at major intersections. • Makes right-turns for people using the mobility lane more challenging.

CITY OF Vancouver WASHINGTON

Design Option 3:
Shared Mobility Lane/Residential Access

CITY OF Vancouver WASHINGTON

Design Option 3:
Shared Mobility Lane/Residential Access

Conceptual Design – Not for Construction

Design Option 3: Shared Mobility Lane/ Residential Access SE 136th Avenue

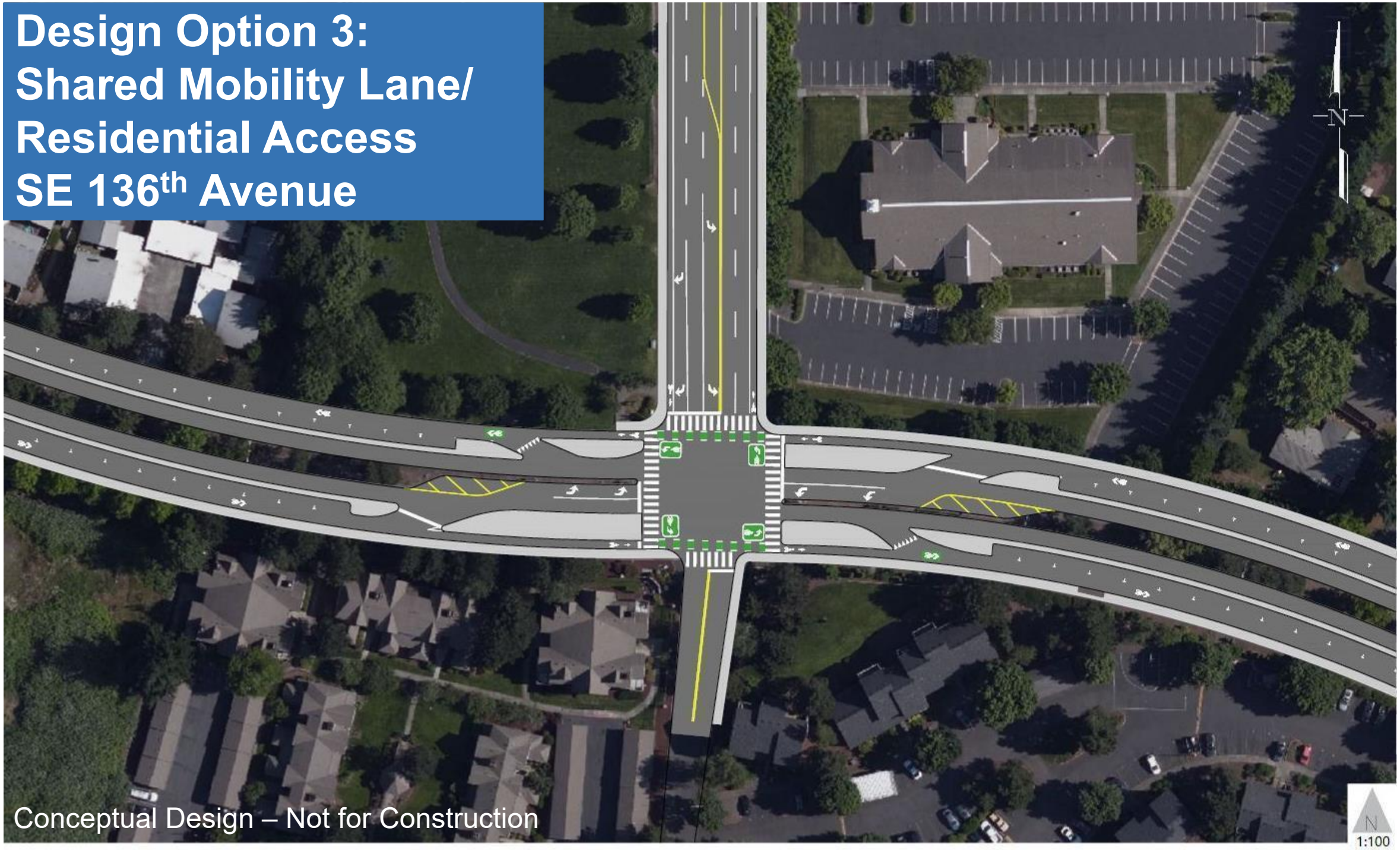

Conceptual Design – Not for Construction

Design Option 3: Shared Mobility Lane/ Residential Access SE Village Loop

Conceptual Design – Not for Construction

Design Option 3: Shared Mobility Lane/Residential Access

Benefits:	Challenges:
• Provides most separation from vehicle travel lane for mobility lane users (barrier and parking). • Consistent and robust barrier would increase effectiveness of traffic calming measures • Maintains most on-street parking, though parking may need to be prohibited across from driveways to allow for space for vehicles to back out. • Reduces crossing distance at intersections.	• Vehicles must enter at the beginning of the block, or they will not be able to access residential driveways. • Will require restricting U-turns at major intersections. • Need to keep speeds low in frontage lane or some users may not feel comfortable sharing with vehicles. • Will need to coordinate with trash pick-up and emergency responders to maintain access is maintained. • Would require most reconfiguration of the design options if sidewalks were constructed in the future.

CITY OF Vancouver WASHINGTON

Alignment with Project Goals

Project Goal	Option 1: Parking Separated	Option 2: Center-Running	Option 3: Shared Mobility/Residential Access
A. Lower Vehicle Speeds	◑	◑	◔ Vehicle Travel Lane / ◑ Mobility and Access Lane
B. Improve Safety & Comfort	◕	◕	◑
C. Improve Intersections & Crossings	◕	◑	◕

Significant Improvement ● ◕ ◑ ◔ ○ No Improvement

CITY OF Vancouver WASHINGTON

Next Steps

Summer

- Online Community Survey on Design Options
- Continued Coordination with City Departments on Design Options

Fall

- Recommendation of Preferred Design Option for Approval

CITY OF Vancouver WASHINGTON

Thank You

VancouverMoves@cityofvancouver.us
www.beheardvancouver.org/mcgillivray-safety

CITY OF Vancouver WASHINGTON

MEMORANDUM

Date: August 1, 2023

To: Chair Ramos and Transportation and Mobility Commission members

CC: Kate Drennan, Principal Transportation Planner, Community Development; Rebecca Kennedy, Deputy Director, Community Development; Ryan Lopossa, Streets & Transportation Division Manager, Public Works

From: Emily Benoit, Senior Transportation Planner, Community Development

RE: **McGillivray Boulevard Safety and Mobility Project – Design Options**

Background

The McGillivray Boulevard Safety and Mobility Project (Project) is evaluating potential changes to improve safety and mobility for all who travel on SE McGillivray Boulevard between SE Chkalov Drive and SE 164th Avenue, and SE Chkalov Drive between SE 7th Street and SE McGillivray Boulevard.

Figure 1: McGillivray Boulevard Project Corridor Boundary

Design Options

Based on the technical findings and community engagement completed in Phase 1 and the Project goals developed in the beginning of Phase 2, three design options have been developed by the Project Team. All three design options propose repurposing one vehicle travel lane in each direction but do not currently propose to make any changes outside the existing roadway, including to the median. As designs are refined, it is possible that additional improvements outside of the right-of-way or in the median may be recommended to ensure safe mobility for all users. Each design option has a description, rendering and benefits and challenges table on pages 3-5.

Opportunities and Constraints

Opportunities and constraints were identified prior to the development of the design options to anticipate potential benefits and challenges for each.

Table 1: Design Option Opportunities and Constraints

Opportunities	Constraints
Roadway space can be repurposed in a way that does not substantially change the driver experience, beyond speed reduction.	The width of the roadway makes slowing down vehicles challenging.
The two most common types of collisions are likely to be reduced through traffic calming and improved channelization.	Residential driveways create potential conflicts with people using mobility lanes.
On-street parking utilization is highest between SE Talton and SE 136th, which allows for the parking lane in other areas to be used for other means.	

Community Engagement

Following the initial community engagement in Phase 1, the Project Team developed a Community Engagement Plan. Phase 2 engagement focuses on small group community conversations. The Project Team hosted seven community conversations, both in-person and virtually, that provided an opportunity to have detailed conversations with community members and gather feedback on the three design options. Over 100 residents expressed interest in participating, and all were invited to join a community conversation. There will also be an online community survey available in August and September to ask the community for additional input on the design options.

Next Steps

The Project Team will refine the design options based on Transportation and Mobility Commission (TMC) and community input and in coordination with the City's Public Works Department. A recommendation on a preferred design option is expected to be brought to TMC in the Fall for approval.

Emily Benoit, Senior Transportation Planner, Community Development, 360-487-7944, Emily.Benoit@cityofvancouver.us

Design Option 1: Parking Separated Mobility Lane

This design option proposes a 10-foot-wide mobility lane next to the curb that would be intended for use by people walking, biking, or using a small mobility device where there are no sidewalks. In portions of the corridor where a sidewalk exists today, people walking would be expected to use the existing sidewalks and the mobility lane would be used by people riding a bicycle or other small mobility device. The mobility lane would be separated from vehicular traffic by a four-foot-wide painted buffer and an eight-foot-wide parking lane. The vehicle travel lane would be 11-feet-wide.

Figure 2. Design Option 1: Parking Separated Mobility Lane

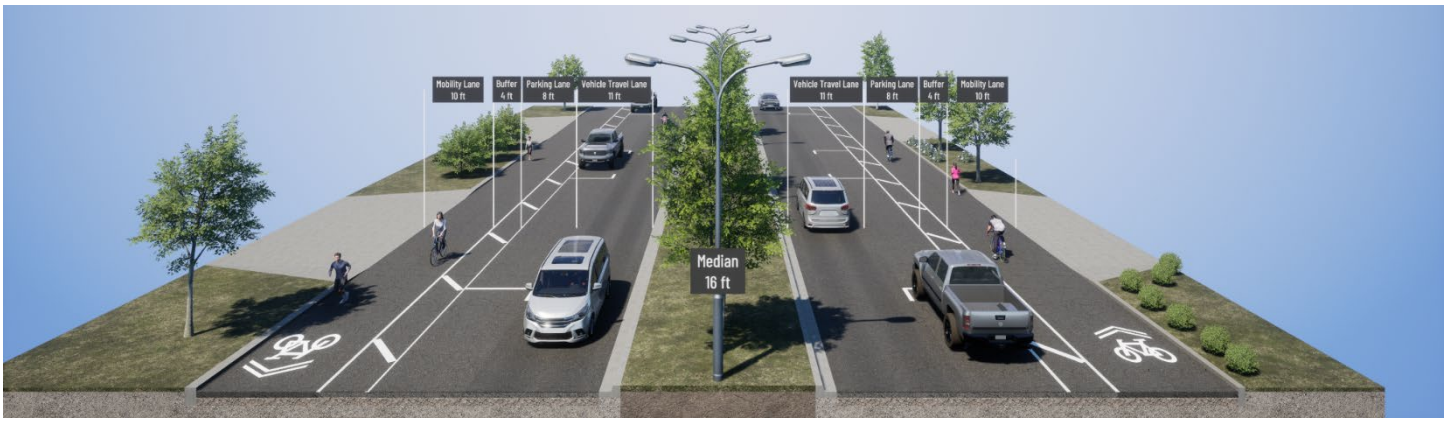

Table 2: Benefits and Challenges for Design Option 1: Parking Separated Mobility Lane

Benefits	Challenges
Ability to create physically separated space for mobility lane.	Where parking is under-utilized, the effectiveness of narrowing the vehicle travel lanes is reduced.
Most on-street parking is maintained.	Residential driveway access causes breaks in the buffer and conflicts with the mobility lane.
Increases comfort for people using the mobility lane.	Avid cyclists have shared concerns about being trapped between the curb and parked cars in the mobility lane.
Perceived narrowing of the roadway will help to lower vehicle speeds	Without a physical barrier, when there are no parked cars, confused drivers may end up in the mobility lane.
	U-turns may need to be restricted at major intersections.

Design Option 2: Center Running Mobility Lane

This design option proposes a five-foot-wide walking lane by the curb that would be separated from vehicular traffic by an eight-foot-wide parking lane where there are no sidewalks. Where sidewalks exist today, people walking would be expected to use the sidewalks and parking would be located next to the curb. A five-foot-wide mobility lane dedicated to travel by bicycles and other small mobility devices would be located next to the median and separated from the 10-foot-wide vehicle travel lane by a four-foot buffer with a vertical barrier.

Figure 3. Design Option 2: Center Running Mobility Lane

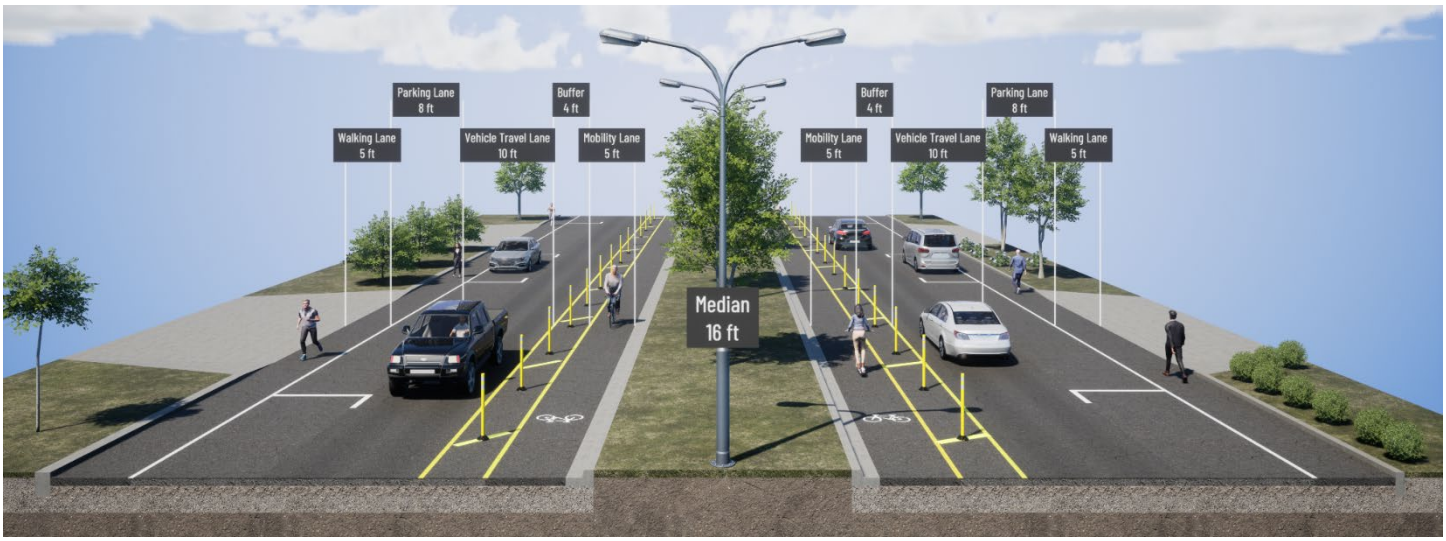

Table 3: Benefits and Challenges for Design Option 2: Center Running Mobility Lane

Benefits	Challenges
Eliminates the driveway and parking lane conflict for people riding a bicycle or using a small mobility device.	The non-standard configuration will require education and may be confusing for people who do not use the corridor regularly.
Limits the removal of on-street parking to intersection approaches for increased sight distance for safety.	U-turns may need to be restricted at major intersections.
Allows for a continuous vertical barriers separating the mobility lane and the vehicle travel lane.	Right-turns will be more challenging for people using the mobility lane.
Creates separated space for people walking and people riding a bicycle or small mobility device to address the speed differential between modes.	
Makes left-turns easier for people using the mobility lane.	

Design Option 3: Shared Mobility Lane/Residential Access

This design option proposes the use of a residential access lane with access to this lane only being provided at the beginning of the block and at one location mid-block. Vehicles could exit the access lane mid-block or at the end of the block. The lane would be intended for use by vehicles accessing residential driveways or parking, and people walking, bicycling, or using other small mobility devices in areas where there are no sidewalks. Where sidewalks exist, use of the access lane would be limited to vehicles accessing residential driveways or parking and people riding a bicycle or using other small mobility devices. The access lane would be separated from the vehicle travel lane by a four-foot concrete median.

Figure 4. Design Option 3: Shared Mobility Lane/Residential Access

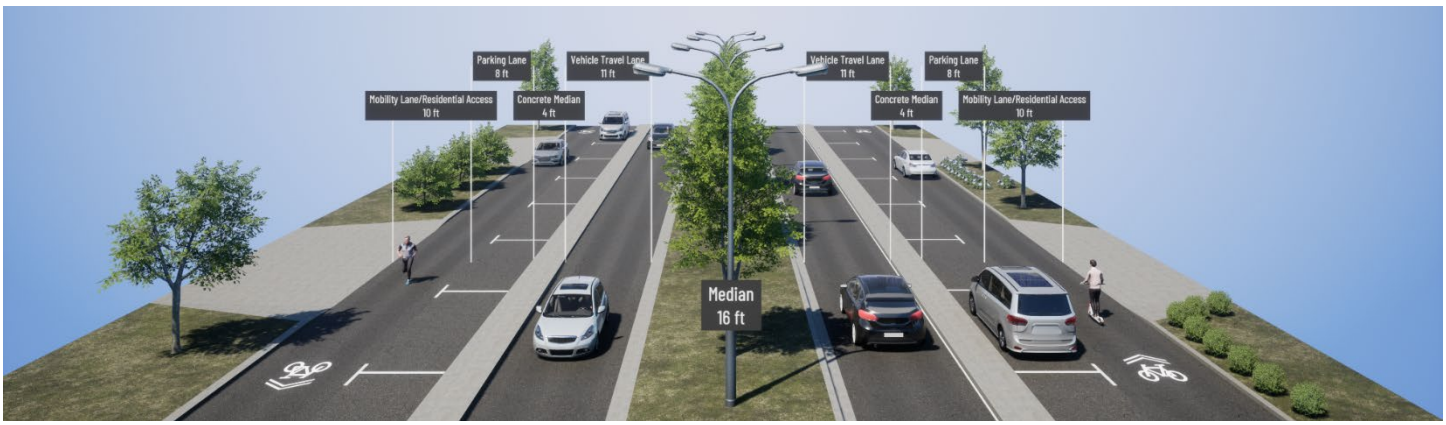

Table 4: Benefits and Challenges for Design Option 3: Shared Mobility Lane/Residential Access

Benefits	Challenges
Provides most separation from vehicle travel lane for mobility lane users with the barrier and parking lane	Vehicles must enter at the beginning of the block, or they will not be able to access residential driveways
Consistent and robust barrier would increase effectiveness of traffic calming measures	U-turns may need to be restricted at major intersections
Maintains most on-street parking, though parking may need to be prohibited across from driveways to allow for space for vehicles to back out	Additional traffic calming will be required to keep speeds low in frontage lane or some users may not feel comfortable sharing with vehicles
Reduces crossing distance at intersections	Coordination with trash pick-up and emergency responders will be needed to ensure access is maintained

MEMORANDUM

DATE: August 1, 2023

TO: Chair Ramos and Transportation and Mobility Commission members
CC: Rebecca Kennedy, Deputy Director, Community Development Department

FROM: Shilpa Mallem, Deputy Design Manager, Interstate Bridge Replacement Program

RE: **Interstate Bridge Replacement (IBR) Program Update**

Introduction
Staff of the Interstate Bridge Replacement (IBR) program will provide a brief status update and discuss next steps for the program.

Overview/Preview
IBR staff will provide members of the City of Vancouver's Transportation and Mobility Commission (TMC) with a brief overview of the Modified Locally Preferred Alternative (LPA), recent program work and activities, as well as next steps.

Background
The Modified LPA and associated program area investments are currently undergoing environmental evaluation as required by the National Environmental Policy Act (NEPA) to better understand the benefits, impacts, and tradeoffs. In late 2023, the IBR program will publish a Draft Supplemental Environmental Impact Statement (SEIS) which will disclose the findings of the environmental evaluation and proposed mitigations for adverse impacts. The document will be available to the public for review and comment during a 60-day public comment period. Community events such as public hearings and open houses will be scheduled to share findings and answer questions.

After the 60-day public comment period closes, refinements to the Modified LPA will be made to address comments, identify mitigation, and confirm a corridor-wide alternative that best addresses the transportation problems to ensure a safe and effective multimodal corridor. Refinements will result in a Final SEIS and Amended Record of Decision issued by the Federal Highway Administration and Federal Transit Administration in late 2024. At this stage, the IBR program will be able to apply for permits, update cost estimates, and further design.

Action, Timeline, Next Steps
No action is requested with this presentation; this presentation is informational and will provide the TMC with an update on the IBR program's recent work and activities as well as next steps. In October 2023, IBR program staff will return to the TMC to provide additional information about the framework

and forthcoming details that will be released with the draft SEIS. Also at that meeting, City staff will share information about consultant support work on development of a Downtown Transit District, multimodal infrastructure connections, placemaking, and urban design in relation to IBR program elements.

Staff Contact:
Katherine Kelly, Senior Policy Advisor, Community Development Department
Email: Katherine.Kelly@cityofvancouver.us; Cell: (360) 644-4446

Attachment(s): None.

.

From: fanmanr@aol.com
To: Transportation and Mobility Commission Agenda Calendar
Subject: 20 Million to make main a vehicle friendly people unfriendly thoroughfare!
Date: Tuesday, August 1, 2023 11:11:48 AM

You don't often get email from fanmanr@aol.com. Learn why this is important

CAUTION: This email originated from outside of the City of Vancouver. Do not click links or open attachments unless you recognize the sender and know the content is safe.

Humbug

From:	Urbane Streets
To:	Transportation and Mobility Commission Agenda Calendar
Cc:	Kennedy, Rebecca
Subject:	2023.08.01 CoV TMC Comment - Main Street Promise Project design
Date:	Tuesday, August 1, 2023 12:51:10 PM

Some people who received this message don't often get email from urbane.streets@gmail.com. Learn why this is important

CAUTION: This email originated from outside of the City of Vancouver. Do not click links or open attachments unless you recognize the sender and know the content is safe.

Dear Chairman Ramos and TMC members,

I wish to share my thoughts on the design of Main Street as a public comment. I have lived in Vancouver for many years and worked and shopped and traveled along Main Street plus working in the field of mobility, street design and traffic safety…

…The design as proposed is an improvement over the past BUT is not bold enough to meet its promise and project objectives for its 50 to 100 year lifespan.

My thoughts based on the last staff workshop to council and the TMC presentation materials, etc.:

1. the street needs more frequent (150 foot spacing) and effective traffic calming (raised intersections and mid block treatment) to bring the motorized vehicle traffic speeds down to the goal of a safer shared space (and based on the NACTO sharrows);
2. the street's 'shotgun' / hallway straight design does not add enough side friction and break in a driver's viewpoint to aid in bringing speeds down to the project goals, a chicane with vertical plantings and clustered 0 degree car parking should be considered;
3. the street needs to have the same event amenities as Esther Street AND add pneumatic bollards to support the easier implementation of such and allow for closure to support the economic development activities and by diverting regional through traffic away, thus reinforcing outdoor dining and the local only circulation within the NACTO thresholds;
4. all elements of this project - especially the innovative and non highway type design features - should be funded NOW with the very flexible federal relief funds versus waiting AND having to pay for it with the city general funds in the future (the latter was what staff recommended at the last workshop), plus the postponed work would undo the new paving;
5. it is very difficult to share the road with cars driving 20 mph especially when cyclists are pedaling uphill, so the future speed and volumes need to brought down closer to 5 mph & 500 ADT thresholds per NACTO guidance vs 20 mph & >2000 ADT;
6. the future LED pedestrian scale lighting needs to support dark sky outcomes AND the lamps tested to see that they meet technical specifications (versus over performing and having higher lux lumen levels than planned);
7. do not forget the opportunity to include solid waste and recycling enclosures on the side streets (like those at the Kiggin's lot and 8th Street); and
8. the issue of loading zones needs to be addressed in this design, as trucks have been

growing larger in the last 20 years and a loading zone plan for downtown has been a missing action item from ~2005s and as such that the street closure would require programmed AM deliveries.

Thank you,

Todd Boulanger, MURP
Transportation Design and Mobility Consultant
Vancouver / Honolulu

PS. Visit Camas' NE 4th Avenue (downtown design from 1960s) near the Liberty Theater for how Vancouver's new Main Street should function as promised.

From: Dan Packard
To: Transportation and Mobility Commission Agenda Calendar
Subject: Comment & concern about the Main street downtown re-design
Date: Tuesday, August 1, 2023 10:19:26 AM
Attachments: 2023-07-25 11_42_36-The Truth about American Cities - Part 1 - Strong Towns [ST01] - YouTube.png

---

You don't often get email from dan.packard@gmail.com. Learn why this is important

CAUTION: This email originated from outside of the City of Vancouver. Do not click links or open attachments unless you recognize the sender and know the content is safe.

Dear Transportation and Mobility commission members,

I have reviewed the published materials about the re-design of Vancouver's Main street. From looking at the Virtual "Drive up Main Street" video, it looks like 75% of the Main street re-design is dedicated to motor vehicles. That means 75% of the corridor for noisy, loud and climate killing vehicles and 25% for the rest of us trying to bicycle, walk, shop, or to enjoy sitting outside on the street at a restaurant or coffee shop. I believe Vancouver can do better with this street.

Maybe getting creative and converting Main street to one lane of motor vehicle travel (and changning Washington street to a more pedestrian friendly two-way design).

Another possibility is to put traffic diverters at some of the intersections to force motor traffic to turn left or right, to prevent the corridor being used as a long length car arterial to drive thru. This would free up more space for people trying to enjoy the hopefully future dynamic Main street of our city.

Perhaps a Main street that looks like the attached picture, with wider sidewalks, less parking and spaces more conducive to bicycling, walking, and greenery. Is redesigning Main street with a "car first" mindset the best option for the future success and viability of the heart of our city? I hope the answer is No!

By reducing the automobile footprint on Main street, the corridor will be friendlier to everyone and more prosperous for the city and businesses.

Thanks and kind regards!

Screenshot from the video "*The Truth about American Cities, part one*" from the *Not Just Bikes* YouTube channel.

Footnote:
Another great video, "*Car-free Streets are Amazing (and we need more of them)*" from *Not Just Bikes*.

From: Paul Sochacki
To: Transportation and Mobility Commission Agenda Calendar
Subject: Comment on Main Street Promise project
Date: Tuesday, August 1, 2023 12:14:11 AM

You don't often get email from sca_paul@yahoo.com. Learn why this is important

CAUTION: This email originated from outside of the City of Vancouver. Do not click links or open attachments unless you recognize the sender and know the content is safe.

Hello,

My name is Paul and I'm a homeowner in the Rose Village neighborhood. I frequently walk and/or bike to downtown Vancouver for meetings and events, and am very excited to hear about some of the improvements being scoped in for the Main Steet Promise project. I've lived in Vancouver for nearly 10 years now, commuting or working in Portland for much of this time, and strongly feel the right direction for Vancouver's downtown will be to make it more accessible to pedestrians and cyclists.

One thing I would *very much* like to see happen would be introducing a pedestrian mall, or at the very least replacing some of the very ample parking space to make Main Street more bike and pedestrian friendly. In its current state, there's a few random bicycle racks dispersed in the area, and this remains a critical piece of infrastructure that's missing and presents a barrier to recreational cycling and active mobility. To make the city of Vancouver a "destination", or even a place people really want to spend time in, we need to have space for people to mindlessly mill around like they do in town squares and pedestrian malls in other parts of the world. Pedestrian corridors promote more engagement with local buisnesses, and this would be very welcome news for retailers and diners catering to visitors. Main Street is already very popular and with the replacement of the I-5 Bridge expected to bringing more visitors to downtown Vancouver than ever before, so this is the perfect opportunity to get a head start on making the Main Street corridor as bike and pedestrian friendly as possible.

To echo some of my fellow cyclists in the community, I also want to add that I love the idea of Rain Gardens coupled with speed tables along Main Street (or even just a section or two), increasing safety for pedestrians/cyclists providing natural while creating an aesthetically pleasing way to handle storm drainage.

This is our opportunity to make downtown Vancouver shine and thrive with life, and I hope you will consider our input in the final rendering of the Main Street Promise project.

Thank you,
Paul

From: BRUCE KINZEY
To: Transportation and Mobility Commission Agenda Calendar; City of Vancouver - Office of the City Manager
Subject: Comment on Vancouver"s Main Street Promise Project
Date: Monday, July 31, 2023 3:33:39 PM

You don't often get email from bkinzey@comcast.net. Learn why this is important

CAUTION: This email originated from outside of the City of Vancouver. Do not click links or open attachments unless you recognize the sender and know the content is safe.

Greetings:
As two members of Vancouver's active cycling community, we find the city's plans for modernizing its transportation network exciting. Vancouver's recently adopted Climate Action Framework states "Shift driving trips to clean, active modes of transportation …strengthen multi-modal connections (bicycle and pedestrian), improve accessibility, and connect [them] to major development centers." We whole-heartedly support this goal; it's good for us, good for the city, good for the planet. We would like to offer a bit of feedback on the information presented in this short video, derived from nearly two decades of commuter cycling both here and in downtown Portland.
The video shows well conditioned cyclists riding along at traffic speeds on the road, supported by sharrows on the road surface. This does not portray a very accurate situation in our experience. Many riders, or more importantly, would-be riders are not in the condition required to keep pace with traffic, and that is especially the case on even a mild uphill slope such as Main Street northbound presents. Please envision a parent with two children, each on their own bikes, trying to use this design with a line of cars following closely behind. That is the kind of situation that the design should be based around.
Sharrows are better than nothing but many drivers still believe and tend to treat cyclists as intruders that don't belong on their personal territory. The aggressiveness of such treatment often reflects the present amount of traffic drivers are having to deal with, despite the fact that bicycle use actually reduces the number of vehicles on the road. One unfortunate result is that people who might otherwise choose bicycle transportation can be intimidated by such behavior, often perceiving genuine threats to their safety such as in the example just provided, and thus fall back to vehicular transport by default.
Please instead consider the use of separate protected bike lanes like the city installed down Columbia Ave, which stands as a hallmark to modern urban design. Such design encourages safe bicycle use for all potential users and represents the future. This is the kind of neighborhood design we believe that many of our younger up and coming citizens, just starting out with their families, are looking for (among other amenities) in their residence criteria.
Thank you for your consideration of this feedback and the opportunity to provide it.
Bruce and Karen Kinzey
Vancouver, WA

From: ALLISON STAFFORD
To: Transportation and Mobility Commission Agenda Calendar
Subject: Concerns regarding renovation of Main Street
Date: Monday, July 31, 2023 1:57:24 PM

[You don't often get email from adagio913@aol.com. Learn why this is important at https://aka.ms/LearnAboutSenderIdentification]

CAUTION: This email originated from outside of the City of Vancouver. Do not click links or open attachments unless you recognize the sender and know the content is safe.

Hi transportation and mobility council, I wanted to voice concern regarding the renovation/modernizing of Main Street. Wider side walks sound great, but what about the bike lanes? I frequent Bike Clark County and see many folks cycling in downtown. I personally would rather have safer bike lanes and speed bumps as a result of the renovation of Main Street. Thank you for your time and consideration.

~Allison Stafford
Vancouver Bicycle Club member
Frequenter of downtown

From:	Drennan, Kate
To:	Nischik, Julie
Subject:	FW: Comment on Vancouver"s Main Street Promise Project
Date:	Tuesday, August 1, 2023 8:53:56 AM

Kate Drennan | Principal Transportation Planner
Pronouns: She/Her/Hers
CITY OF VANCOUVER, WASHINGTON
Community Development Department (CDD)
Desk: 360-487-7959 **Mobile:** 360-624-2958
www.cityofvancouver.us

From: Dollar, Sarah <Sarah.Dollar@cityofvancouver.us>
Sent: Monday, July 31, 2023 5:26 PM
To: Arenz, Julie <Julie.Arenz@cityofvancouver.us>; Drennan, Kate <Kate.Drennan@cityofvancouver.us>; Kennedy, Rebecca <Rebecca.Kennedy@cityofvancouver.us>; Lopossa, Ryan <ryan.lopossa@cityofvancouver.us>
Subject: FW: Comment on Vancouver's Main Street Promise Project

Hello,

Please see the public comment below.

Sarah Dollar | Assistant to the City Council
CITY OF VANCOUVER, WASHINGTON
City Manager's Office
Pronouns: She/Her/Hers
www.cityofvancouver.us

From: BRUCE KINZEY <bkinzey@comcast.net>
Sent: Monday, July 31, 2023 3:33 PM
To: Transportation and Mobility Commission Agenda Calendar <TransMobilityCommissionAgendaCal@cityofvancouver.us>; City of Vancouver - Office of the City Manager <CMO@cityofvancouver.us>
Subject: Comment on Vancouver's Main Street Promise Project

> You don't often get email from bkinzey@comcast.net. Learn why this is important

CAUTION: This email originated from outside of the City of Vancouver. Do not click links or open attachments unless you recognize the sender and know the content is safe.

Greetings:

As two members of Vancouver's active cycling community, we find the city's plans for modernizing its transportation network exciting. Vancouver's recently adopted Climate Action Framework states "Shift driving trips to clean, active modes of transportation …strengthen multi-modal connections (bicycle and pedestrian), improve accessibility, and connect [them] to major development centers." We whole-

heartedly support this goal; it's good for us, good for the city, good for the planet. We would like to offer a bit of feedback on the information presented in this short video, derived from nearly two decades of commuter cycling both here and in downtown Portland.

The video shows well conditioned cyclists riding along at traffic speeds on the road, supported by sharrows on the road surface. This does not portray a very accurate situation in our experience. Many riders, or more importantly, would-be riders are not in the condition required to keep pace with traffic, and that is especially the case on even a mild uphill slope such as Main Street northbound presents. Please envision a parent with two children, each on their own bikes, trying to use this design with a line of cars following closely behind. That is the kind of situation that the design should be based around.

Sharrows are better than nothing but many drivers still believe and tend to treat cyclists as intruders that don't belong on their personal territory. The aggressiveness of such treatment often reflects the present amount of traffic drivers are having to deal with, despite the fact that bicycle use actually reduces the number of vehicles on the road. One unfortunate result is that people who might otherwise choose bicycle transportation can be intimidated by such behavior, often perceiving genuine threats to their safety such as in the example just provided, and thus fall back to vehicular transport by default.

Please instead consider the use of separate protected bike lanes like the city installed down Columbia Ave, which stands as a hallmark to modern urban design. Such design encourages safe bicycle use for all potential users and represents the future. This is the kind of neighborhood design we believe that many of our younger up and coming citizens, just starting out with their families, are looking for (among other amenities) in their residence criteria.

Thank you for your consideration of this feedback and the opportunity to provide it.

Bruce and Karen Kinzey
Vancouver, WA

From: Drennan, Kate
To: Nischik, Julie
Subject: FW: Lack of bike lanes in Vancouver
Date: Monday, July 31, 2023 3:53:41 PM

One more....

Kate Drennan |Principal Transportation Planner
Pronouns: She/Her/Hers
CITY OF VANCOUVER, WASHINGTON
Community Development Department (CDD)
Desk: 360-487-7959 Mobile: 360-624-2958
www.cityofvancouver.us

-----Original Message-----
From: Arenz, Julie <Julie.Arenz@cityofvancouver.us>
Sent: Monday, July 31, 2023 1:49 PM
To: Dollar, Sarah <Sarah.Dollar@cityofvancouver.us>; Kennedy, Rebecca <Rebecca.Kennedy@cityofvancouver.us>; Drennan, Kate <Kate.Drennan@cityofvancouver.us>; Lopossa, Ryan <ryan.lopossa@cityofvancouver.us>
Subject: RE: Lack of bike lanes in Vancouver

Thank you.

Julie H. Arenz | Small Business Project Manager CITY OF VANCOUVER, WASHINGTON Economic Prosperity and Housing Department
P: 360-487-7940 | TTY: 360-487-8602
Julie.Arenz@cityofvancouver.us
www.cityofvancouver.us

-----Original Message-----
From: Dollar, Sarah <Sarah.Dollar@cityofvancouver.us>
Sent: Monday, July 31, 2023 10:26 AM
To: Kennedy, Rebecca <Rebecca.Kennedy@cityofvancouver.us>; Drennan, Kate <Kate.Drennan@cityofvancouver.us>; Lopossa, Ryan <ryan.lopossa@cityofvancouver.us>; Arenz, Julie <Julie.Arenz@cityofvancouver.us>
Subject: FW: Lack of bike lanes in Vancouver

Hello All,

Please see the below and attached emails from the CMO inbox.

Thanks,

Sarah Dollar | Assistant to the City Council CITY OF VANCOUVER, WASHINGTON City Manager's Office
Pronouns: She/Her/Hers
www.cityofvancouver.us

-----Original Message-----
From: Nielsen, Kristin <Kristin.Nielsen@cityofvancouver.us>
Sent: Monday, July 31, 2023 10:18 AM
To: Dollar, Sarah <Sarah.Dollar@cityofvancouver.us>
Subject: FW: Lack of bike lanes in Vancouver

fyi

-Kristin

-----Original Message-----
From: City of Vancouver - Office of the City Manager <CMO@cityofvancouver.us>
Sent: Monday, July 31, 2023 8:33 AM
To: Nielsen, Kristin <Kristin.Nielsen@cityofvancouver.us>
Subject: FW: Lack of bike lanes in Vancouver

Hi Kristen,

We also received this in the CMO inbox as well for TMC.

Thank you!

-Amelia

-----Original Message-----
From: LYNNE CUEVAS <lynne996@aol.com>
Sent: Monday, July 31, 2023 5:44 AM
To: City of Vancouver - Office of the City Manager <CMO@cityofvancouver.us>
Subject: Lack of bike lanes in Vancouver

[You don't often get email from lynne996@aol.com. Learn why this is important at https://aka.ms/LearnAboutSenderIdentification]

CAUTION: This email originated from outside of the City of Vancouver. Do not click links or open attachments unless you recognize the sender and know the content is safe.

I've noticed that the city is planning to improve some roads in downtown. The problem that I see with your plan is that there isn't a designated bike lane. Cyclists are in the roadway with cars.
Our car traffic has gotten out of control with the lack of enforcement for speeding etc and you want us on the same platform?
That's insane! Give us bike lanes!!

Sent from my iPhone

From: Kennedy, Rebecca
To: Nischik, Julie
Subject: FW: Main St promise
Date: Tuesday, August 1, 2023 10:12:15 AM
Attachments: image003.png

FYI

Rebecca Kennedy | Deputy Director
Pronouns: She/Her/Hers
CITY OF VANCOUVER, WASHINGTON
Community Development Department (CDD)
M: (360) 624-6070 | **O:** (360) 487-7896
rebecca.kennedy@cityofvancouver.us
www.cityofvancouver.us

OUR VANCOUVER
OUR FUTURE 2045
Learn more about *Our Vancouver*: an effort to update our City's plan for growth and development over the next 20 years.

From: Dollar, Sarah <Sarah.Dollar@cityofvancouver.us>
Sent: Tuesday, August 1, 2023 10:04 AM
To: Arenz, Julie <Julie.Arenz@cityofvancouver.us>; Lopossa, Ryan <ryan.lopossa@cityofvancouver.us>; Drennan, Kate <Kate.Drennan@cityofvancouver.us>; Kennedy, Rebecca <Rebecca.Kennedy@cityofvancouver.us>
Subject: FW: Main St promise

Please see the public comment below.

Sarah Dollar | Assistant to the City Council
CITY OF VANCOUVER, WASHINGTON
City Manager's Office
Pronouns: She/Her/Hers
www.cityofvancouver.us

From: City of Vancouver - Office of the City Manager <CMO@cityofvancouver.us>
Sent: Tuesday, August 1, 2023 8:06 AM
To: Nielsen, Kristin <Kristin.Nielsen@cityofvancouver.us>
Subject: FW: Main St promise

Good morning, Kristen!

We got a couple more for TMC.

-Amelia

From: Ruth Romer <ruth.romer@gmail.com>
Sent: Monday, July 31, 2023 6:14 PM
To: City of Vancouver - Office of the City Manager <CMO@cityofvancouver.us>
Subject: Main St promise

> You don't often get email from ruth.romer@gmail.com. Learn why this is important

CAUTION: This email originated from outside of the City of Vancouver. Do not click links or open attachments unless you recognize the sender and know the content is safe.

Please promise me that 20 million dollars won't be spent on an outdated plan. Take away the cars and bring in the bikes and pedestrians. There is a reason why Vancouver is so car-centric. The infrastructure for safe biking and walking is just not there.
Help us out here. To be healthy we shouldn't be riding around in climate-unfriendly cars!

Ruth Romer
Vancouver resident

From:	Nielsen, Kristin
To:	Dollar, Sarah
Subject:	FW: Please don't make the Main street Promise be known as the "Broken Promise
Date:	Monday, July 31, 2023 10:17:40 AM

fyi

-Kristin

From: City of Vancouver - Office of the City Manager <CMO@cityofvancouver.us>
Sent: Monday, July 31, 2023 10:07 AM
To: Nielsen, Kristin <Kristin.Nielsen@cityofvancouver.us>
Subject: FW: Please don't make the Main street Promise be known as the "Broken Promise

Hi Kristin,

We got 1 more

-Amelia

From: Ed Falsetti <Ed.Falsetti@rfan.com>
Sent: Monday, July 31, 2023 9:41 AM
To: City of Vancouver - Office of the City Manager <CMO@cityofvancouver.us>
Subject: Please don't make the Main street Promise be known as the "Broken Promise

> You don't often get email from ed.falsetti@rfan.com. Learn why this is important

CAUTION: This email originated from outside of the City of Vancouver. Do not click links or open attachments unless you recognize the sender and know the content is safe.

Hi-

Please re-think how to use the $20M dollars for the Main Street Promise. Please consider a "Non-Automotive" plaza for this redesign.

While living in the town of Iowa City, Iowa in the 1970s, the city leadership took 3 sections of streets and made them pedestrian/bike only, and so many were opposed. The businesses on this street are thriving, and the area immediately became a destination.

It seems that what Vancouver is proposing is incredibly shortsighted.

There are numerous cities that during COVID closed down streets and put tables outside to entice guests.....You know what, those cities are fighting to get money to beautify the areas and keep them pedestrian only. You can look at Mountain View CA as an example. You should call their civic leaders.

I attended University of California at Santa Barbara, when I went back for a re-union, I was amazed

at what they have done with State street.

https://santabarbaraca.com/explore-and-discover-santa-barbara/neighborhoods-towns/santa-barbara/downtown-santa-barbara/state-street-promenade/

You have an unbelievable opportunity to be forward thinking and make a mark on Vancouver, please seize it!

Please don't make the Main street Promise be known as the "Broken Promise"….You have a great Opportunity, don't squander it!

Best Regards,

Ed Falsetti

5611 NE 265th Street
Ridgefield, WA, 98642

From:	Drennan, Kate
To:	Nischik, Julie
Subject:	FW: the plan for Mainstreet - good idea to look at other successes
Date:	Tuesday, August 1, 2023 8:53:33 AM
Attachments:	attachment.png

Kate Drennan | Principal Transportation Planner
Pronouns: She/Her/Hers
CITY OF VANCOUVER, WASHINGTON
Community Development Department (CDD)
Desk: 360-487-7959 **Mobile:** 360-624-2958
www.cityofvancouver.us

From: Dollar, Sarah <Sarah.Dollar@cityofvancouver.us>
Sent: Monday, July 31, 2023 5:27 PM
To: Arenz, Julie <Julie.Arenz@cityofvancouver.us>; Drennan, Kate <Kate.Drennan@cityofvancouver.us>; Kennedy, Rebecca <Rebecca.Kennedy@cityofvancouver.us>; Lopossa, Ryan <ryan.lopossa@cityofvancouver.us>
Subject: FW: the plan for Mainstreet - good idea to look at other successes

Hello,

Please see the public comment below.

Thanks,

Sarah Dollar | Assistant to the City Council
CITY OF VANCOUVER, WASHINGTON
City Manager's Office
Pronouns: She/Her/Hers
www.cityofvancouver.us

From: Christine Toscano <joechristine@comcast.net>
Sent: Monday, July 31, 2023 11:34 AM
To: City of Vancouver - Office of the City Manager <CMO@cityofvancouver.us>
Subject: the plan for Mainstreet - good idea to look at other successes

> You don't often get email from joechristine@comcast.net. Learn why this is important

CAUTION: This email originated from outside of the City of Vancouver. Do not click links or open attachments unless you recognize the sender and know the content is safe.

Dear City Council,
Here is something to consider when planning Main street improvements which will help merchants and restaurants as well as increase enjoyment of people visiting.

When we visited Santa Barbara last year, we learned the downtown was thriving since it closed

some blocks off entirely to cars. It managed to thrive in a singular way even during the pandemic. Santa Barbara is demonstratably very successful financially due to its management. Here is an article about their positive experience when closing to cars a section of downtown.

Santa Barbara CA State Street to remain closed to cars

San Luis Obispo Tribune
https://www.sanluisobispo.com › local › article276971923

Jul 3, 2023 — The Santa Barbara City Council voted to **keep nine blocks of State Street closed to vehicle traffic**, benefiting downtown restaurants.

One of the reasons I feel our new waterfront is so successful is that it provided premium walkability. We made a place for people to amble and this contributes a lot to the success of the new waterfront. This was successful The parking works and people love to stroll with their families or friends.
A simple frequent Trolley is classy alternative to cars as well for those rainy days - San Francisco which has been a beacon to people for years was synonymous with its cable cars and is more similar to vancouver because it has cold weather 1/2 the year.Let's truly upgrade the experience of downtown … not just give it the same old same old. Cars and more cars are not the future!
Thank you, Christine Toscano 360 798 5286

From: Nielsen, Kristin
To: Dollar, Sarah
Subject: FW: Upcoming Main Street redesign
Date: Monday, July 31, 2023 10:18:12 AM

---

fyi

-Kristin

From: City of Vancouver - Office of the City Manager <CMO@cityofvancouver.us>
Sent: Monday, July 31, 2023 8:35 AM
To: Nielsen, Kristin <Kristin.Nielsen@cityofvancouver.us>
Subject: FW: Upcoming Main Street redesign

Hi Kristen,

We also received this one for the TMC.

Thank you,

-Amelia

From: marie bike <bikemarie01@yahoo.com>
Sent: Monday, July 31, 2023 7:36 AM
To: City of Vancouver - Office of the City Manager <CMO@cityofvancouver.us>
Subject: Upcoming Main Street redesign

> You don't often get email from bikemarie01@yahoo.com. Learn why this is important

CAUTION: This email originated from outside of the City of Vancouver. Do not click links or open attachments unless you recognize the sender and know the content is safe.

I am a resident of Vancouver and a bicyclist.
The Main Street video shows zero understanding of cycling on Sharrowed streets. It portrays riders (no helmets, despite existing city ordinance) riding to the side and drivers passing them. Riding on Sharrowed streets, we take the lane to avoid being doored or being hit by impatient drivers passing too closely. Imagine riding with the 6 to 8 foot grill of an F-350 pick-up on your tail. The steady almost 3% grade riding northbound will slow any rider's speed which is likely already only 10-12mph uphill. Frustrating for a driver. Deadly for a cyclist
Thank you for your consideration
Marie Darrig

From: Heidi Cody
To: Transportation and Mobility Commission Agenda Calendar
Subject: Let"s improve on Main Street Promise
Date: Monday, July 31, 2023 9:01:39 PM
Attachments: hcody_mainstreetpromise.rev.pdf

You don't often get email from hcodystudio@gmail.com. Learn why this is important

CAUTION: This email originated from outside of the City of Vancouver. Do not click links or open attachments unless you recognize the sender and know the content is safe.

Good morning,

Attached and in the body of this email, please find my letter asking for a redesign of the Main Street Promise project. Thank you for your consideration.

SIncerely,
Heidi Cody

August 1, 2023

Heidi Cody
1506 SE 113th Court
Vancouver WA 98664

Transportation and Mobility Commission
City of Vancouver

Dear Commissioners.

I agree with many folks you are hearing from tonight, who are concerned with a Main Street Promise design plan that is lacking in ambition. This redesign is such an incredible opportunity to transform the experience of downtown Vancouver. I hope you will reconsider the current plan and vastly improve it.

We would love to see a car-free plan, which would create a pedestrian-friendly downtown that will dramatically increase its street appeal. Cities that have adopted this car-free approach experience thriving businesses, restaurants, and people enjoying urban space without having to worry about vehicle traffic or its noise and pollution. This would be a much friendlier version of downtown Vancouver and make it a place worth visiting.

I love the ideas of a tram and more tree canopy. We need a vision for Main Street that reflects the ambitious reductions in air pollution and greenhouse gas emissions that are

goals in our Climate Action Framework. You have a chance to make Downtown Vancouver a truly special place. Please revise this plan and make it something we can all be happy about.

Thank you,

Heidi Cody

From: mack nicholson
To: Transportation and Mobility Commission Agenda Calendar
Date: Monday, July 31, 2023 9:23:01 AM

You don't often get email from d.mack.attack.95@gmail.com. Learn why this is important

CAUTION: This email originated from outside of the City of Vancouver. Do not click links or open attachments unless you recognize the sender and know the content is safe.

I live in Vancouver and ride my bike or take the bus everywhere. I ride downtown to shop, meet friends or volunteer almost every day. I don't drive.

Please do not put Sharrows on Main Street and think you are making me safer. Drivers don't like it when we ride in the middle of the road and slow them down. They don't know that we are doing what we're supposed to do - ride ON the Sharrows. If I ride by the edge, a driver might think they should pass me, and sometimes that means they try to squeeze by when a car is coming. It is really scary.

I also never ride close to parked cars. People open doors to get out without looking first.

I am a strong rider, but I can't ride up Main at the speed a car can drive. The only good place I've seen new Sharrows is on Devine for the steep descent when I can ride the car's speed limit.

Why not just remove car traffic and make it more like Farmers' Market or the Waterfront? Both are fun places to go and honestly, Main Street could be more fun.

From: Ruth Romer
To: Transportation and Mobility Commission Agenda Calendar
Subject: Main St Promise
Date: Monday, July 31, 2023 6:11:12 PM

You don't often get email from ruth.romer@gmail.com. Learn why this is important

CAUTION: This email originated from outside of the City of Vancouver. Do not click links or open attachments unless you recognize the sender and know the content is safe.

Hello,
I am a cyclist and am aghast that the Main St makeover is geared towards car traffic and car parking. Vancouver is living in the dark ages instead of moving towards the future of clean air, making downtown less congested and more pedestrian and bike friendly. There are lots of streets for cars. Let them park elsewhere and walk to downtown. Browse the stores on the way.

Look at what Burlington VT has done, imitating forward thinking towns in Europe that has done the same.

Be a visionary!

Ruth Romer
Vancouver resident

From: Paul Casey
To: Transportation and Mobility Commission Agenda Calendar
Subject: Main Street
Date: Tuesday, August 1, 2023 11:25:06 AM

[You don't often get email from pcasey53@gmail.com. Learn why this is important at https://aka.ms/LearnAboutSenderIdentification]

CAUTION: This email originated from outside of the City of Vancouver. Do not click links or open attachments unless you recognize the sender and know the content is safe.

Commissioners,

I was pleased when I read that you were showing Main Street some love. I'm fond of many businesses there. When I read the plans and looked at the video, however, I was shocked.

I'm sad because Main Street competes now with the very people-centered Waterfront, Esther Short Park, and Farmers' Market, all popular and packed because they recognize that getting from A to B is not always a person's goal.

Removing cars and parking is being done in urban designs world-wide (and in Vancouver as above) with great success. We can't afford to let Main Street die because of unfounded fears regarding the effects of pedestrianization on business. Please read the research. It repeatedly finds business is not only unharmed, it actually improves.

Please see this project through the lens of a social scientist creating a space not for A to B travel, but for the interaction of people and their environment. Why make pedestrians – moms, kids, grandparents- wait for a gap in traffic rushing past? Why should drivers have priority – again – when what we really want is for people to come here and linger in safety as they connect, eat, drink, and shop?

I like the curbless sidewalks in the plan and heard they might allow Main to evolve into a car-free public space in the future. Why wait? My husband is in a wheelchair 24/7 now, so I get it that people want to drive and park right by the door of their destination, but in a county of over half a million people that's not possible. Not downtown, at Winco, or even the doctor's office. What is possible now is to make it safe and accessible for us to wheel across the street without worrying that a driver won't see us. If my husband's foot falls off the footrest while crossing a plaza, we aren't endangered.

Endangered… these plans completely disregard our warming planet and our recently adopted Climate Action Framework: "Shift driving trips to clean, active modes of transportation." Vehicle travel was identified as the producer of 34% of our local carbon output in 2019. New designs must reflect our responsibility to the health of people and the planet.

I’m sorry to be this blunt, but you’ve given us a 20-million-dollar drive-thru that endangers people and the planet and short-changes businesses on Main Street. You’ve looked backward, not forward in these designs. Main Street has so much personality and potential to offer us the connected experience we need as humans. Please reconsider.
Paul Casey

From: Charles Shaw
To: Transportation and Mobility Commission Agenda Calendar
Subject: Main Street Improvements
Date: Monday, July 31, 2023 2:16:22 PM

You don't often get email from chaznw@gmail.com. Learn why this is important

CAUTION: This email originated from outside of the City of Vancouver. Do not click links or open attachments unless you recognize the sender and know the content is safe.

Hi,
I think doing something with Main Street is a worthy undertaking. Instead of the proposed changes, I would like to see Main St. closed off and made into a bike/pedestrian mall. A small hop on/off trolley could run up and down Main St. and connect to a parking structure at the Waterfront. This would tie the beautiful Waterfront to and even more beautiful Main St. Yes, you can do better than the proposed design.

Charles Shaw
chaznw@gmail.com
503-729-7560
2707 E. 30th St.

From: ANNA DANZER
To: Transportation and Mobility Commission Agenda Calendar
Subject: Main street make over
Date: Tuesday, August 1, 2023 11:37:04 AM

You don't often get email from danzera@comcast.net. Learn why this is important

CAUTION: This email originated from outside of the City of Vancouver. Do not click links or open attachments unless you recognize the sender and know the content is safe.

hello,
I have heard there are plans to redo main street.
I have not seen your current plans, but wanted to weighing as someone who has a husband with a disability.
Currently main street is just not walk friend for anyone and even harder for anyone with a disability. Last week I took my husband to lunch at LaBottega and we had to park across the street. Getting a man on crutches across a busy street is impossibly hard with all the traffic. We would have loved to look at the shops after lunch but the sidewalks were to broken and hard to maneuver even for me. We had to watch where we where walking in fear of falling.
I am hoping that the plans take disability into consideration.
My thoughts are to make it more community friendly like closed street to traffic, one level side walk so people can walk and linger. Restaurants can have more outdoor seating. The water front is not far away and people go there because they can walk around and it's easy for handicap people to wheel around.
Also making it more bike friendly would really draw in the cycling community as cyclist love to pedal to places they can get food and not worry about cars. People in general like to go places that other people hang out at.if covid has taught us anything it's that people want to be around people. So by making main street more community friendly more people would go to enjoy it.
Anna Danzer

From: Roseanne Voyles
To: Transportation and Mobility Commission Agenda Calendar
Subject: Main Street Project
Date: Monday, July 31, 2023 5:12:26 PM

[You don't often get email from rosie.alaska@gmail.com. Learn why this is important at https://aka.ms/LearnAboutSenderIdentification]

CAUTION: This email originated from outside of the City of Vancouver. Do not click links or open attachments unless you recognize the sender and know the content is safe.

Please consider my voice coming from a positive place. As a resident of Vancouver, I am so proud of the growth and intentionality of city planning officials.

I am one of the many Individuals asking for a more pedestrian focused end goal.

I worry that the city will fall into the same trap of other cities, multiple visions colliding into one another. In 2009 (officially) Vancouver was focused on planting trees and native plants, now trees have taken the backseat. Seen more as an afterthought also, the room the trees are given to grow is abysmal.

My point in saying that, is wonderful goals and initiatives are started. The end goal seems to wax and wane over time.

Could we pause on or take a breather and revisit the plan? When I say, I mean all of you in power.

It feels like this project is being rushed in the execution. I know there was planning etc, I'm not discounting it. Was there enough?

It feels like residents go to these project meetings but the voices fall on deaf ears if it's not what you want to hear.

Aging population, where's the walkers and wheel chairs in the picture? Not everyone is able bodied. Also, are people really going to be so relaxed around all the exhaust fumes of trucks and "classic" cars?

Just asking for a think again, or a quick once over and again, is this the best plan or can anything be shifted for pedestrian focused longevity goals?

Best regards,

R. Hutchison

From: Israel Lopez
To: Transportation and Mobility Commission Agenda Calendar
Subject: Main Street Project Feedback
Date: Tuesday, August 1, 2023 11:53:28 AM

You don't often get email from israel@ilopez.com. Learn why this is important

CAUTION: This email originated from outside of the City of Vancouver. Do not click links or open attachments unless you recognize the sender and know the content is safe.

Hi my name is Israel Lopez.

In May of 2023 the US Surgeon General released a new “Surgeon General Advisory” that called attention to the public health crisis of loneliness, isolation and lack of connection in our country. [1]

Because it may not be obvious; it was found that: the lack of connection can increase the risk for premature death to levels comparable to smoking daily. Being a millenial myself; in school it was drilled into me how dangerous smoking was. *Y'all thought we didn't listen in school, we did.*

So, to me this is serious.

I agree with the Surgeon General. I see it as a Volunteer Computer Science Teacher here in Clark County. The youth of today struggle, and lack of connection-isolation is chief among them. Pair that up with drugs and it is an obvious tragedy.

I can put my students on the path to economic success, but I cannot solve the crisis of loneliness and isolation alone. That weighs on me heavily. I tell my therapist this, and she says “Do something insufficient, you do not have to solve the problem to be unburdened by the weight of it.”

So this is me trying to do something insufficient. I’m here to ask the TMC and Vancouver City to reconsider the Main Street Promise, because as it is now, the visitors to the area have no real reason to stay there. If we continue to prioritize transit by vehicle, then the visitors to main street continue to be transactions; come in, complete your business and go home.

As an 8-year small business owner, I understand how hard it is to make a buck; and I also understand how important a small business is to the social fabric of our communities. We have a responsibility to the community we serve.

Businesses need people. People need Businesses. People need People. We need each other.

People visiting Main Street who have a reason to stay will spend more money, shop, eat and connect if pedestrian, cycling and transit infrastructure is present. A car parked does nothing to build community.

During the pandemic cities that closed car-traffic to dining & shopping areas showed increased spending and community building as a result. Heck, Houston Texas has figured this out and closed down seven blocks of their main street in March of this year. Permanently. [2]

We have a chance to decide what the streets are for? Cars, or Community? Hopefully, so that we may build a stronger, healthier, more resilient population.

That is the Main Street Promise I want to see for my city.

Thank you for your time.
Sources:

[1]
https://www.hhs.gov/about/news/2023/05/03/new-surgeon-general-advisory-raises-alarm-about-devastating-impact-epidemic-loneliness-isolation-united-states.html

[2]
https://www.houstonchronicle.com/politics/houston/article/street-closures-outdoor-seating-17853805.php

From: wsuvprof@gmail.com
To: Transportation and Mobility Commission Agenda Calendar; City of Vancouver - Office of the City Manager
Subject: Main Street Promise
Date: Monday, July 31, 2023 10:41:06 AM

You don't often get email from wsuvprof@gmail.com. Learn why this is important

CAUTION: This email originated from outside of the City of Vancouver. Do not click links or open attachments unless you recognize the sender and know the content is safe.

I was disappointed by the Main Street Promise design I saw in the Columbian. I have been to several other cities that have created pedestrian malls that were much more vibrant than the design Vancouver is proposing. I would strongly urge the city and transportation commission to consider making a pedestrian mall.

Joe Cote

"Each thing I do I rush through so I can do something else" Stephen Dobyns
“Half of me wants a cold beer. And the other half does too” Lyrics by Thomas Rhett

From:	Tina Barrows
To:	Transportation and Mobility Commission Agenda Calendar
Cc:	City of Vancouver - Office of the City Manager; Arenz, Julie; Brum, Teresa
Subject:	Main Street Promise
Date:	Tuesday, August 1, 2023 10:22:42 AM

Some people who received this message don't often get email from tinafaraway@gmx.net. Learn why this is important

CAUTION: This email originated from outside of the City of Vancouver. Do not click links or open attachments unless you recognize the sender and know the content is safe.

Greetings, everyone at the City.

Considering that we are already at the early stages of Climate Collapse and Multi Ecosystems failure, here is what I would like you to consider when planning the Main Street Project:

-Main Street should be flat out car free as individual passenger cars (be they electric or not) are a highly inefficient use of resources and energy, as well as a deterrent to a pedestrian friendly zone

-Decisions during the planning process should be made in a timely and assertive manner, without wasting resources and repeated meetings that are needed to focus on the larger picture of carbon neutrality for the whole city.

-The most amazing Main Street won't do us any good if we have continuing wildfires, droughts, and other unstable climate patterns threatening human existence (yes it is that bad.)

I fully agree with other participant's more eloquent asks for specific measures such as a free tram connecting all downtown areas, and automatic bollards.

Personally, I would love to see a very dense tree canopy to help with temperature control, as well edible landscaping with fruits and berries to further encourage the use of the space by the community

The time is now. Let's do this.

Regards, Tina Barrows

Sent from Mail for Windows

From: Lori Benton
To: Transportation and Mobility Commission Agenda Calendar
Subject: Main Street Promise
Date: Tuesday, August 1, 2023 10:05:56 AM

You don't often get email from loribtn30@yahoo.com. Learn why this is important

CAUTION: This email originated from outside of the City of Vancouver. Do not click links or open attachments unless you recognize the sender and know the content is safe.

I was very much hoping to see Main Street/downtown Vancouver become a car-free area where we can walk or ride a bike or even take an electric Hop On/Hop Off bus to visit shops, restaurants and Kiggins Theater. I've really enjoyed that experience in European cities that I've visited. It would be more in keeping with our climate goals and I understand that there will be a new parking structure by the library, anyway. If there must be cars, I would like to see bike lanes and measures to slow down the cars. I've recently learned about speed tables, which are less jarring that the speed bumps we have in my neighborhood, and automatic bollards as a protective barrier for pedestrians and bicyclists. I was recently part of the conversation about McGillivray Blvd and think the last two structures would work well there, also. Thank you. Lori Benton in Cascade Park

From: Douglas Burke
To: Transportation and Mobility Commission Agenda Calendar
Subject: Main Street Promise
Date: Tuesday, August 1, 2023 12:04:12 PM

You don't often get email from mainarddb@yahoo.com. Learn why this is important

CAUTION: This email originated from outside of the City of Vancouver. Do not click links or open attachments unless you recognize the sender and know the content is safe.

Why not invest the 20 million in a people-centered plaza instead of what is currently being presented? Think of Vancouver's Waterfront or the farmers' market. Go to Portland's pedestrianized street on SE Ankeny Rainbow Road.

World-wide plazas for businesses thrive. You've designed a drive-through. Picture yourself sitting and sipping but your view is blocked by curbside bumper-to-bumper SUVs; the smell of exhaust taints your salad; your conversation is interrupted by the noise of drivers gunning engines and booming car stereos. Instead, give us a destination where just being "part of the action" encourages stopping, shopping, wining and dining.

Thank you for considering a more climate/human smart approach.

Doug Burke

Outlook for Android

From: Jim Byrne
To: Transportation and Mobility Commission Agenda Calendar
Subject: Main Street Promise
Date: Monday, July 31, 2023 9:25:18 AM

You don't often get email from byrnejim7@gmail.com. Learn why this is important

CAUTION: This email originated from outside of the City of Vancouver. Do not click links or open attachments unless you recognize the sender and know the content is safe.

Dear Commissioners,

The proposed "Main Street Promise" looks like more of the same. It is the same version of Main street, with a few cosmetic traffic (parking) changes. I would prefer a more bold approach, eliminating traffic on Main altogether. Main street needs to be more bicycle and pedestrian friendly. Other cities have done this to their benefit. Please use your imaginations and design something truly awesome. It's time to think out of the box. Thank you.

Jim Byrne
28501 NW 7th Ave.
Ridgefield, WA 96642

From: Carole Dollemore
To: Transportation and Mobility Commission Agenda Calendar
Subject: Main Street Promise
Date: Monday, July 31, 2023 9:03:43 PM

[You don't often get email from caroledoll@comcast.net. Learn why this is important at https://aka.ms/LearnAboutSenderIdentification]

CAUTION: This email originated from outside of the City of Vancouver. Do not click links or open attachments unless you recognize the sender and know the content is safe.

According to Ryan Lopossa the transportation manager, this project will be a complete paradigm shift. Not if we don't have a more connected, walkable and bikeable city by supporting pedestrian- and bike-friendly infrastructure. We need a designated bike lane on Main St. Sharrows don't do what we hoped they would. Studies back up the claims about what it takes to make our streets safer for bicycling. We need a separate bike lane on Main St.
This is a once in a generation opportunity. If the Main St promise project is an inviting and safe experience they will come.

Carole Dollemore
Vancouver resident for 46yrs.

Sent from my iPhone

From:	Peter L. Fels
To:	Transportation and Mobility Commission Agenda Calendar; City of Vancouver - Office of the City Manager; Ken Williams; Leah Jackson; Jason Cromer; zagatton@gmail.com; israel@ilopez.com; Sara Schmit; Jim Thomas; Amy Horstman; dan.packard@gmail.com; Carole; Holly Williams; zefreak@gmail.com
Cc:	Alliance For Community Engagement; Derya Ruggles; Stober, Ty
Subject:	Main Street Promise
Date:	Sunday, July 30, 2023 2:35:15 PM

CAUTION: This email originated from outside of the City of Vancouver. Do not click links or open attachments unless you recognize the sender and know the content is safe.

Peter Fels
5121 NW Franklin Street
Vancouver WA 98663
telephone: (360) 737-3154 • plfels@gmail.com

Transportation Mobility Commission
tmc@cityofvancouver.us

RE: Main Street Promise

Dear Commissioners:

I hope you will recommend sending the current design of the "Main Street Promise" back to the drawing boards. The proposal is a mere facelift of existing conditions that does nothing to modernize our City and fails to meet any of the goals of the Climate Action Framework.

Over the years, Main Street has lost almost all of its retail businesses. While there have been increases in downtown's vitality since the 1990s, cosmetic changes to the parking on Main Street are not going to make the street more attractive to pedestrians, cyclists or outside visitors. What is going to bring people to lower Main Street is a unique car-free experience where people can stroll or ride on a silent electric tram and children can play in a safe tree lined environment.

I expect other commenters will send you examples of places that have converted streets to exclude private cars, such as Santa Barbara CA, Burlington VT. and various European cities. I have wandered in a number of car free Italian city centers, Dublin, Barcelona, The Grove in Los Angeles, Third Street in Santa Monica and streets in Brooklyn that were temporarily closed to traffic. They all were crowded with people enjoying the experience, dining and shopping.

Vancouver has ambitious goals to reduce greenhouse gas emissions. To get there we need to reduce single occupancy vehicle traffic and increase pedestrian, bicycle and transit use. I have advocated for several years for establishment of a hop-on-hop-off electric tram that circulates along Main Street from the Waterfront to Fourth Plain as a way to get people out of their cars and to connect Uptown, Downtown, the Waterfront and soon, the Waterfront Gateway.

Lower Main Street with an increased tree canopy, a tram and limits on cars could help us move toward the Climate Action Framework's goals while showing that it is worth visiting.

Please tell City planners that the current proposal for Main Street Promise is backward thinking and should be replaced with a truly pedestrian friendly car-free design.

Thank you.

s/
Peter Fels

P.S. I expect you will have more people wishing to comment than can be accommodated in the 30 minutes allowed for your Public Forum on August 1. Please consider rescheduling for a longer session to allow you to hear from all who want to address this issue.

From: Jan V
To: Transportation and Mobility Commission Agenda Calendar
Cc: City of Vancouver - Office of the City Manager
Subject: Main Street Promise
Date: Tuesday, August 1, 2023 11:10:38 AM

CAUTION: This email originated from outside of the City of Vancouver. Do not click links or open attachments unless you recognize the sender and know the content is safe.

Commissioners,

I was pleased when I read that the city was showing Main Street some love. I'm fond of many businesses there. When I read the plans and looked at the video, however, I was shocked.

I'm sad because Main Street competes now with the very people-centered Waterfront, Esther Short Park, and Farmers' Market, all popular and packed because they recognize that getting from A to B is not always a person's goal.

Removing cars and parking is being done in urban designs world-wide (and in Vancouver as above) with great success. We can't afford to let Main Street die because of unfounded fears regarding the effects of pedestrianization on business. Please read the research. It repeatedly finds business is not only unharmed, it sometimes improves.

Please see this project through the lens of a social scientist creating a space not for A to B travel, but for the interaction of people and their environment. Why make pedestrians – moms, kids, grandparents- wait for a gap in traffic rushing past? Why should drivers have priority – again – when what we really want is for people to come here and linger in safety as they connect, eat, drink, and shop?

I like the curbless sidewalks in the plan and heard they might allow Main to evolve into a car-free public space in the future. Why wait? My husband is in a wheelchair 24/7 now, so I get it that people want to drive and park right by the door of their destination, but in a county of over half a million people that's not possible. Not downtown, at Winco, or even the doctor's office. What is possible now is to make it safe and accessible for us to wheel across the street without worrying that a driver won't see us. If my husband's foot falls off the footrest while crossing a plaza, we aren't endangered as we stop to secure it.

Endangered… these plans completely disregard our warming planet and our recently adopted Climate Action Framework: "Shift driving trips to clean, active modes of transportation." Vehicle travel was identified as the producer of 34% of our local carbon emissions in 2019. New designs must reflect our responsibility to the health of people and the planet.

I'm sorry to be this blunt, but you've given us a 20-million-dollar drive-thru that endangers people and the planet and short-changes businesses on Main Street. You've looked backward, not forward. Main Street has so much personality and potential to offer us the connected experience we need as humans. Please reconsider.

Jan Verrinder

From: Bill Laitner
To: Transportation and Mobility Commission Agenda Calendar
Subject: Main Street Promise
Date: Monday, July 31, 2023 7:58:09 PM

You don't often get email from billlait@gmail.com. Learn why this is important

CAUTION: This email originated from outside of the City of Vancouver. Do not click links or open attachments unless you recognize the sender and know the content is safe.

Changing one lane to a sharrow will do nothing to increase bicycle safety and is no change from current conditions. When I bicycle Main Street I have to force drivers to "share" the lane with me. Many are frustrated. NOBODY understands sharrows. Data shows they don't work anywhere. They won't work on Main Street.

A wider sidewalk and sharrows? That's basically all? That's the best we can do?

This appears to be a huge missed opportunity. The people of Vancouver deserve a bold, creative improvement from their leaders.

Please take a second look .

From: Samin Sepasi
To: Transportation and Mobility Commission Agenda Calendar; City of Vancouver - Office of the City Manager; Ken Williams; Leah Jackson; Jim Thomas; Amy Horstman; dan.packard@gmail.com; Carole; Holly Williams; Kennedy, Rebecca; Derya Ruggles; Peter L. Fels; Stober, Ty
Subject: Main Street Promise Project
Date: Monday, July 31, 2023 11:06:27 PM

Some people who received this message don't often get email from saminsepasi@gmail.com. Learn why this is important

CAUTION: This email originated from outside of the City of Vancouver. Do not click links or open attachments unless you recognize the sender and know the content is safe.

Hi Commissioners,

I've been following the Main Street Promise project since it was first announced, and was excited for a design that would reimagine Main Street.
As long as I've lived here, Main Street has been suffering from loss of business, and most people now opt to go to the new waterfront instead of Main Street, due to the speeding cars, smell of exhaust fumes, and lack of space for pedestrians on Main.

I attended both open houses, and both times, an overwhelming majority of people's feedback was to remove vehicles from Main Street, and make it a pedestrian corridor. Where is that feedback? Why is the new design so focused on vehicles?

Does the Main Street Promise project not know that pedestrian (car-free) streets bring in much higher revenue for businesses, and even adjacent businesses? Where are the bicycle lanes that we so desperately want and need, and that our City's Climate Action Plan and Transportation System Plan so clearly outline should be at the forefront of our infrastructure projects?

To put it simply: This design is disappointing. It's a design that hasn't worked for the last 50 years, and it certainly won't work again with the addition of a few more trees and tiny benches next to a wall of parked cars.

I would ask you to please recommend to the Main Street Promise project team to change their design and ask for a car-free Main Street. It's not only the Main Street people want, but it's the one that people, and our businesses need.

Thank you,
Samin

From:	Jason Cromer
To:	Transportation and Mobility Commission Agenda Calendar; City of Vancouver - Office of the City Manager; Ken Williams; Leah Jackson; Jim Thomas; Amy Horstman; dan.packard@gmail.com; Carole; Holly Williams; Kennedy, Rebecca; Derya Ruggles; Peter L. Fels
Cc:	Michael Doherty; Samin Sepasi; Jan V; zefreak@gmail.com; Zack Gatton; Sara Schmit; israel@ilopez.com; Stober, Ty
Subject:	Main Street Promise Project
Date:	Sunday, July 30, 2023 10:59:24 PM

CAUTION: This email originated from outside of the City of Vancouver. Do not click links or open attachments unless you recognize the sender and know the content is safe.

Hello Commissioners,

This Tuesday, August 1st, I hope you reject the Main Street Promise design proposal in its entirety. It is a design that does not meet our TSP or Climate Action Framework guidelines, nor does it supply any bicycle infrastructure, employ any traffic calming, and it makes no noticeable difference for the pedestrian experience.

The proposed design is merely a visual improvement on today's existing conditions, where the small gain of space from converting diagonal to parallel parking spots has been used to add a handful of benches next to parked vehicles, whilst removing bicycle corrals, parklets, and small streetscape areas. The current design's sidewalk width only allows for two adults to comfortably walk next to each other, meanwhile vehicles enjoy two travel lanes, and two lanes of parking throughout the entire 10-block stretch. There is no bicycle infrastructure, and nothing to stop vehicles from speeding 35+ mph down the street, as they do today.

We know this design will not work. This design has been in use for the last 50+ years, and the result has been a repeated pattern of failing businesses, poor pedestrian foot traffic, and a dangerous road that is riddled with speeding, exhaust noise/fumes, and drag races. What we do know is that transforming retail streets, like Main Street, into pedestrian malls has a profound effect on improving foot traffic, increased revenue for businesses, and increasing safety.

Our TSP and Climate Action Plan clearly state that the city, and the infrastructure we build, must contribute to lowering greenhouse gas emissions, and reduce vehicle miles driven while increasing usage of transit and microbility. How can a Main Street designed for people to drive down contribute to that? How can a Main Street designed without bicycle infrastructure contribute to an increase of bicycling? The answer is: It can't.

This is 2023, and cities around the world, and even in North America, are making these changes across their towns and cities because it works. A car-free Main Street isn't something bold, experimental, or risky. It is a tried and true method of creating a place that attracts people, and allows large swaths of people to gather and enjoy the space, and frequent the local businesses. It has become the standard for good urban design, and by not adopting this modern design, we will be decades behind before construction even starts.

We are at an inflection point where you have the power to dictate what Main Street will look like for the next 50+ years. Please: request that the Main Street Promise team create a design for a street that pulls people in and allows everyone, their children, the disabled, and the elderly to access the full width of the street, and create an environment that gets people to stay on Main Street, not a design that merely pushes people to drive through it. Thank you.

Best,
Jason

From: Martha Ray
To: Transportation and Mobility Commission Agenda Calendar
Subject: Main Street Promise
Date: Tuesday, August 1, 2023 11:59:41 AM

> You don't often get email from mafaray@hotmail.com. Learn why this is important

CAUTION: This email originated from outside of the City of Vancouver. Do not click links or open attachments unless you recognize the sender and know the content is safe.

Please consider raised crosswalks for safety on Main Street.

Martha Ray
360 991-6059

From: Nancy Helget
To: Nischik, Julie
Subject: Main Street Promise
Date: Monday, July 31, 2023 9:04:22 PM

You don't often get email from felget@comcast.net. Learn why this is important

CAUTION: This email originated from outside of the City of Vancouver. Do not click links or open attachments unless you recognize the sender and know the content is safe.

Commissioners,

I would like to comment on the "Main Street Promise" plan. I oppose the plan, mainly because I don't think the plan moves our city forward toward achieving any stated goal in the city's adopted Climate Action Framework. Transportation emissions are one focus of the Framework. Reducing auto emissions is a goal. The "Main Street Promise" ignores the problem of auto emissions and merely entrenches the existing auto focused streets in our downtown. There's nothing creative or even different about the plan. Yet presumably, some city money will be spent to carry it out.

Our city should be encouraging bicycle and pedestrian traffic to reduce GHG emissions from autos. I would urge the city to consider a pedestrian only Main Street combined with public transportation to help pedestrians come into and out of the area. Those two things combined with bicycle lanes would be a step in the direction of encouraging Vancouver citizens to view transportation options differently and still enable us to be and shop in the downtown area.

Please don't vote in favor of merely reconfiguring Main Street. That would be a waste of money and a waste of an opportunity to move our city away from auto only transportation.

Thank you for considering my comment.

Nancy Helget
5121 NW Franklin St.
Vancouver, WA 98663

From: Roy McCormick
To: Transportation and Mobility Commission Agenda Calendar
Subject: Main Street redesign
Date: Monday, July 31, 2023 6:08:39 PM

[You don't often get email from romick1@comcast.net. Learn why this is important at https://aka.ms/LearnAboutSenderIdentification]

CAUTION: This email originated from outside of the City of Vancouver. Do not click links or open attachments unless you recognize the sender and know the content is safe.

The proposed redesign is stunningly short-sighted. We can do better.
If you want a welcoming, quieter street simple remove the on-street parking and sharrows and add bike lanes.
Frequent, free shuttle/trolley service would complete the tranformation into a welcoming space.

Thanks for your time, -Roy

Roy McCormick
30302 NE Walmer Rd
Ridgefield WA 98642

From: David Pike
To: Transportation and Mobility Commission Agenda Calendar
Subject: Main street redesign.
Date: Monday, July 31, 2023 10:40:25 AM

You don't often get email from david.pike122197@gmail.com. Learn why this is important

CAUTION: This email originated from outside of the City of Vancouver. Do not click links or open attachments unless you recognize the sender and know the content is safe.

Please include bike lanes to reduce traffic and keep bikers safe

From: veghan1@aol.com
To: Transportation and Mobility Commission Agenda Calendar
Subject: Main Street redux
Date: Monday, July 31, 2023 6:55:15 AM

You don't often get email from veghan1@aol.com. Learn why this is important

CAUTION: This email originated from outside of the City of Vancouver. Do not click links or open attachments unless you recognize the sender and know the content is safe.

Seriously, has anyone heard of climate change????? Can the Main Street project be centered on pedestrian and bike traffic, bus stops and stroller friendly curbs? It's lovely to stroll through the Main Street area with friends, encouraging shopping in and out of shops you'd never notice while cruising by in a car.

From: Ed Falsetti
To: Transportation and Mobility Commission Agenda Calendar
Subject: Please re-think "Main Street Promise"
Date: Monday, July 31, 2023 9:33:32 AM

You don't often get email from ed.falsetti@rfan.com. Learn why this is important

CAUTION: This email originated from outside of the City of Vancouver. Do not click links or open attachments unless you recognize the sender and know the content is safe.

Hi-

Please re-think how to use the $20M dollars for the Main Street Promise. Please consider a "Non-Automotive" plaza for this redesign.

Growing up in the Midwest, the city leadership took 3 sections of streets and made them pedestrian/bike only, and so many were opposed. The businesses on this street are thriving, and the area is a destination.

It seems that what Vancouver is proposing is incredibly shortsighted.

There are numerous cities that during COVID closed down streets and put tables outside to entice guests.....You know what, those cities are fighting to get money to beautify the areas and keep the pedestrian only. You can look at Mountain View CA as an example. You should call their civic leaders.

You have an unbelievable opportunity to be forward thinking and make a mark on Vancouver, please seize it!

Look at what Brussels has done...IT IS AMAZING. Vancouver could do the same.

Best Regards,

Ed Falsetti

5611 NE 265th Street
Ridgefield, WA, 98642

From:	Emilie Olson
To:	Transportation and Mobility Commission Agenda Calendar
Cc:	City of Vancouver - Office of the City Manager; Arenz, Julie; Brum, Teresa
Subject:	Public comment on Main Street Promise design proposal
Date:	Tuesday, August 1, 2023 9:53:38 AM

Some people who received this message don't often get email from emilie.olson@gmail.com. Learn why this is important

CAUTION: This email originated from outside of the City of Vancouver. Do not click links or open attachments unless you recognize the sender and know the content is safe.

Good morning, Members of the Transportation and Mobility Commission,

My name is Emilie Olson, and as a constituent of Vancouver, I am reaching out to provide input on the Main Street Promise design. Through this multi-million dollar project, the City has a transformative opportunity to realize a shared recreational commons that advances its climate action goals and a safer, multimodal experience for all its residents. Unfortunately, the design as it's currently proposed does not fulfill this vision to its fullest potential. I encourage the Commission to consider the public feedback calling for practical revisions to the design that center active transportation, including a larger emphasis on pedestrian- and bike-friendly infrastructure as part of the overall plan. The Main Street Promise project will have a multigenerational impact, stewarding large capital investments that will only get more expensive to retrofit as time goes on, rather than building it right and holistically at the onset. Anticipating changing mobility patterns for consumers and businesses and the need for climate-friendly land use planning as a design principle from the get go will optimize resources over the long run and position the City of Vancouver as a positive model for other jurisdictions. To better adapt the current car-centric design to a more diverse set of mobility needs and possibilities, refinements to the Main Street Promise design should:

- prioritize new bike lanes over parking (as it is, downtown street parking and the parking garages are currently underutilized and plenty more parking spaces are on the way at the Waterfront and C Street);
- provide supporting infrastructure to facilitate safe extended travel/commutes via micromobility means (e.g., e-bikes, e-scooters);
- explore creative combinations of transportation modes to reduce VMT (e.g., a hop on-hop off electric bus or tram traversing up and down Main Street, the Waterfront, Fourth Plain and back to alleviate the need for parking density along popular shopping and dining corridors); and
- pilot "car-free" days on portions of Main Street by installing automated bollards that can easily be taken down or activated at will).

Incorporating these recommendations, among other ideas to promote healthy foot traffic, traffic calming, and scaled-back emissions from vehicular congestion, will boost the overall accessibility of Main Street so community members of various ages, incomes, mobility capabilities, and backgrounds can equitably enjoy the benefits of Vancouver's vibrant public spaces and local economy. I respectfully encourage you to translate the spirit of these comments and related practical recommendations from community members into key adjustments to the Main Street Promise project design as it is finalized.

Thank you for your consideration,

Emilie

From: Jordan C
To: Transportation and Mobility Commission Agenda Calendar
Subject: The Main street promise/redesign
Date: Tuesday, August 1, 2023 9:50:01 AM

You don't often get email from jordan.chrysler@gmail.com. Learn why this is important

CAUTION: This email originated from outside of the City of Vancouver. Do not click links or open attachments unless you recognize the sender and know the content is safe.

Why not invest the 20 million in a people-centered plaza? Think of Vancouver's Waterfront or the farmers' market. Have you been to Portland's pedestrianized street on SE Ankeny Rainbow Road? World-wide plazas for businesses thrive. We can too.

Be one of the first places to make an area actually people and bike friendly. It would be nice to not always have to keep your head on a swivel always on the lookout for a car/driver not paying attention.

From:	Sarah Collmer
To:	Nischik, Julie
Cc:	cmo@cityofvacncouver.us; Arenz, Julie; Brum, Teresa
Subject:	Vancouver"s TMC Must Exercise Foresight and Environmental Responsibility
Date:	Saturday, July 29, 2023 2:09:42 PM

Some people who received this message don't often get email from sicollmer@gmail.com. Learn why this is important

CAUTION: This email originated from outside of the City of Vancouver. Do not click links or open attachments unless you recognize the sender and know the content is safe.

Dear Transportation and Mobility Commissioners,

As Vancouver continues to grow and evolve as a progressive, vital city with an eye to the future, so too our transportation and mobility plans should reflect foresight and attention to the most pressing problem of our planet: climate change.

I urge the commission to review and revise the current "Main Street Promise" project, which continues to emphasize car traffic at the expense of more people and planet-friendly options like bicycling and walking. To reduce carbon emissions and encourage healthier forms of community transport, the city should be emphasizing expanded pedestrian areas, eliminating car traffic in highly walkable city blocks, creating more car-free travel lanes for pedestrian and bicycle traffic, reducing speed and increasing safety in areas that do allow car traffic, and encouraging the development and use of electric mass transit vehicles. None of these are radical proposals; they both reflect the popularity of pedestrian-friendly city centers and best practices as evidenced in cities around the country and, more notably, worldwide.

Please exercise foresight, responsibility, and a sense of environmental justice in planning for the future of Vancouver's transportation future. Review and revise your current plan for greater pedestrian and cyclist safety, and ensure that Vancouver is taking a lead in caring about environmental quality for its current and future citizens.

Sincerely,
Sarah Collmer
Hough Resident

From: Tracey Kasten Heil
To: Transportation and Mobility Commission Agenda Calendar
Subject: What about the bike lanes on the new and "improved" Main St.?!?
Date: Monday, July 31, 2023 12:30:22 PM

You don't often get email from tracey.heil@outlook.com. Learn why this is important

CAUTION: This email originated from outside of the City of Vancouver. Do not click links or open attachments unless you recognize the sender and know the content is safe.

To whom it may concern,

If the city is going to spend $20 million to redo Main Street, shouldn't they do so in a way that honors climate change objectives? What about ensuring safety and peace of mind for cyclists? The proposed design is far from visionary, and our citizens deserve better as we look 50 years into the future.

Please send the design back to the drawing board and come back with something that shows that the design honors the objectives of reducing vehicle emissions by *encouraging* bicycle use, not discouraging it by blatantly bad design.

Respectfully,

Tracey Kasten Heil
Camas, WA
360-852-3250

Get Outlook for iOS

From: Nielsen, Kristin
To: Kennedy, Rebecca; Drennan, Kate; Nischik, Julie
Subject: FW: Main Street Vision (Time for a better one)
Date: Tuesday, August 1, 2023 2:45:19 PM

Rebecca, Kate and Julie,

I think there are only a few left to send to you.

-Kristin

From: Amy Horstman <ajhorstman@yahoo.com>
Sent: Tuesday, August 1, 2023 1:31 PM
To: McEnerny-Ogle, Anne <A.McEnerny-Ogle@cityofvancouver.us>; City of Vancouver - Office of the City Manager <CMO@cityofvancouver.us>
Subject: Fw: Main Street Vision (Time for a better one)

> You don't often get email from ajhorstman@yahoo.com. Learn why this is important

CAUTION: This email originated from outside of the City of Vancouver. Do not click links or open attachments unless you recognize the sender and know the content is safe.

FYI. Vancouver can do better for Main Street than the current proposal. I trust you all will help ensure that happens by providing direction and leadership.

----- Forwarded Message -----
From: Amy Horstman <ajhorstman@yahoo.com>
To: TMC@cityofvancouver.us <tmc@cityofvancouver.us>
Sent: Tuesday, August 1, 2023 at 01:29:04 PM PDT
Subject: Main Street Vision (Time for a better one)

Dear Commissioners,
Over the past 20 years I've watched downtown Vancouver begin to emerge from a ghost town that closed up by 8 pm (and many buildings just closed up all day) to begin to have some vibrancy. There are more offerings with food and entertainment and far more people present. I am so pleased that the City recognizes that is time for a new vision for Main.

Unfortunately, the plans outlined in the Main Street Promise are sadly lacking. This would be a stellar opportunity to provide on-street covered dining areas and full lane bicycle and pedestrian walkways, increase tree canopy to help combat urban heat island and climate change, and create a connected space for people of all ages and abilities to navigate and enjoy their community. There are so many examples of great car-free zones in other cities that have boosted business and provide vibrant areas with increased foot and bicycle traffic that directly result in increased sales. One example can be found in Boise, Idaho's 8th Street Car Free zone. Since 2020 they are seeing a boost in business activity and sales. These covered dining areas are packed in summer and winter alike. This car free zone has created pedestrian hotspots that spill over to the adjacent businesses and result in increased sales.

Currently, crossing Main Street on foot even in an intersection is unpleasant. Cars travel at excessive speeds and don't observe the cross walks. Some have begun to use it as an exaust-intenstive parade route, revving unmufflered engines until the windows rattle. Even as an able-bodied person, I have had several 'close calls' with vehicles while I was crossing the street in a cross walk on Main.

Vancouver has successfully increased its downtown density to finally warrant a grocery store. Now we need to

provide safe and pleasant walking, sitting, and dining spaces for the population that lives within and visits downtown. We will reap rewards both in cash investment by consumers but also with increased opportunity for green space and tree canopy, community connectivity and social spaces, better walkability /cycling, reduced particulate emissions, which all leads to a healthier and more fit population.

Fire your consultants and go back to the drawing board. There are more than 20 million reasons Vancouver can do better than this plan.

-Amy Horstman
Hough Neighborhood
Vancouver

From: Nielsen, Kristin
To: Kennedy, Rebecca; Drennan, Kate; Nischik, Julie
Subject: FW: My thoughts on Main
Date: Tuesday, August 1, 2023 2:43:35 PM

---

fyi

-Kristin

From: City of Vancouver - Office of the City Manager <CMO@cityofvancouver.us>
Sent: Tuesday, August 1, 2023 2:32 PM
To: Nielsen, Kristin <Kristin.Nielsen@cityofvancouver.us>
Subject: FW: My thoughts on Main

For TMC

-Amelia

From: Jason Cromer <jasonmcromer@gmail.com>
Sent: Tuesday, August 1, 2023 2:09 PM
To: City of Vancouver - Office of the City Manager <CMO@cityofvancouver.us>; McEnerny-Ogle, Anne <A.McEnerny-Ogle@cityofvancouver.us>; Stober, Ty <T.Stober@cityofvancouver.us>; bart@biaofclarkcounty.org; Fox, Sarah <S.Fox@cityofvancouver.us>; Harless, Kim <K.Harless@cityofvancouver.us>; Paulsen, Erik <E.Paulsen@cityofvancouver.us>
Subject: Fwd: My thoughts on Main

CAUTION: This email originated from outside of the City of Vancouver. Do not click links or open attachments unless you recognize the sender and know the content is safe.

Dear Commissioners,

The proposed "Main Street Promise" looks like more of the same. It is the same version of Main street, with a few cosmetic traffic (parking) changes. I would prefer a more bold approach, eliminating traffic on Main altogether. Main street needs to be more bicycle and pedestrian friendly. Other cities have done this to their benefit. Please use your imaginations and design something truly awesome. It's time to think out of the box. Thank you.

Jim Byrne
28501 NW 7th Ave.
Ridgefield, WA 96642
--
You received this message because you are subscribed to the Google Groups "Alliance For Community Engagement" group.
To unsubscribe from this group and stop receiving emails from it, send an email to alliance-for-community-engagement+unsubscribe@googlegroups.com.

To view this discussion on the web visit https://groups.google.com/d/msgid/alliance-for-community-engagement/CAOCz2Ei5ykcVx%2BzXmVjE22V8gU9AFwo2h7-WrFr2D%3Dp3Uc8dfQ%40mail.gmail.com.

From: Angie D
To: Transportation and Mobility Commission Agenda Calendar; City of Vancouver - Office of the City Manager
Subject: Main street makeover
Date: Tuesday, August 1, 2023 2:32:20 PM

Some people who received this message don't often get email from gypsea00@hotmail.com. Learn why this is important

CAUTION: This email originated from outside of the City of Vancouver. Do not click links or open attachments unless you recognize the sender and know the content is safe.

I'm a local cyclist and advocate of public transportation. So, here's my thoughts on your plan for Main Street.

Where is the attention to cyclists? Sharrows are useless and all they do is irritate drivers. Most cyclists don't want to ride that street with car doors opening on both sides, drivers cursing us because we're riding in "their lane"….

Can't you turn this into a walking street at least for a block to begin? How about a dedicated bike lane and remove some of the street parking?! Climate Action Framework adopted only seven months ago states "Shift driving trips to clean, active modes of transportation … strengthen multi-modal connections (bicycle and pedestrian), improve accessibility, and connect [them] to major development centers." Why does the Main Street investment, surely a major development center, not encourage the same accessibility?

The businesses along Main Street won't get any of my money unless you come up with a better plan!

I realize this is late but hope you'll take into consideration just the same.

Angie

Adversity does not build character – it reveals it

From: Amy Horstman
To: Transportation and Mobility Commission Agenda Calendar
Subject: Main Street Vision (Time for a better one)
Date: Tuesday, August 1, 2023 1:29:15 PM

You don't often get email from ajhorstman@yahoo.com. Learn why this is important

CAUTION: This email originated from outside of the City of Vancouver. Do not click links or open attachments unless you recognize the sender and know the content is safe.

Dear Commissioners,
Over the past 20 years I've watched downtown Vancouver begin to emerge from a ghost town that closed up by 8 pm (and many buildings just closed up all day) to begin to have some vibrancy. There are more offerings with food and entertainment and far more people present. I am so pleased that the City recognizes that is time for a new vision for Main.

Unfortunately, the plans outlined in the Main Street Promise are sadly lacking. This would be a stellar opportunity to provide on-street covered dining areas and full lane bicycle and pedestrian walkways, increase tree canopy to help combat urban heat island and climate change, and create a connected space for people of all ages and abilities to navigate and enjoy their community. There are so many examples of great car-free zones in other cities that have boosted business and provide vibrant areas with increased foot and bicycle traffic that directly result in increased sales. One example can be found in Boise, Idaho's 8th Street Car Free zone. Since 2020 they are seeing a boost in business activity and sales. These covered dining areas are packed in summer and winter alike. This car free zone has created pedestrian hotspots that spill over to the adjacent businesses and result in increased sales.

Currently, crossing Main Street on foot even in an intersection is unpleasant. Cars travel at excessive speeds and don't observe the cross walks. Some have begun to use it as an exaust-intenstive parade route, revving unmufflered engines until the windows rattle. Even as an able-bodied person, I have had several 'close calls' with vehicles while I was crossing the street in a cross walk on Main.

Vancouver has successfully increased its downtown density to finally warrant a grocery store. Now we need to provide safe and pleasant walking, sitting, and dining spaces for the population that lives within and visits downtown. We will reap rewards both in cash investment by consumers but also with increased opportunity for green space and tree canopy, community connectivity and social spaces, better walkability /cycling, reduced particulate emissions, which all leads to a healthier and more fit population.

Fire your consultants and go back to the drawing board. There are more than 20 million reasons Vancouver can do better than this plan.

-Amy Horstman
Hough Neighborhood
Vancouver

From: Stephen LaPorte
To: Transportation and Mobility Commission Agenda Calendar
Subject: We need a car-free Main street
Date: Wednesday, August 2, 2023 10:00:36 AM

You don't often get email from stephen.laporte@gmail.com. Learn why this is important

CAUTION: This email originated from outside of the City of Vancouver. Do not click links or open attachments unless you recognize the sender and know the content is safe.

Commissioners,

I'm writing to you in support of making Main St. car free. I bike frequently downtown for both commuting to activities and exercise, and I think that incorporating bike plans into the Main St.'s redesign will make our community more safe, accessible, and enjoyable. I believe that designs built for bikes and pedestrians first can accommodate more people and provide a great experience for everyone—including those who arrive by car!

I'm proud to live in Vancouver WA and I'm looking forward to spending time on Main St. with my family for the years ahead. I hope it's something we can do safely by bike.

Best,
Stephen LaPorte

From:	Eli Andrew
To:	Hansen, Bart; Stober, Ty; Paulsen, Erik; Fox, Sarah; Perez, Diana; Harless, Kim; City of Vancouver - Office of the City Manager; McEnerny-Ogle, Anne; Transportation and Mobility Commission Agenda Calendar; Brum, Teresa; Arenz, Julie; Lopossa, Ryan; jirving@mackaysposito.com; Kennedy, Rebecca; Michael Walker; admin@vdausa.org; Cooley, William
Cc:	Jason Cromer
Subject:	Car-free Main Street
Date:	Monday, August 7, 2023 10:48:25 AM

Some people who received this message don't often get email from eli.yates.andrew@gmail.com. Learn why this is important

CAUTION: This email originated from outside of the City of Vancouver. Do not click links or open attachments unless you recognize the sender and know the content is safe.

Dear Mayor and Councillors,

I am writing to urge you to support a car-free vision for Main Street. As a resident of Vancouver, I tend to only visit Main Street on rare occasions because I find it to be very unwelcoming to pedestrians. When I heard about the proposed changes to Main Street I realized that this could be our opportunity to build a welcoming environment for people rather than vehicles.

As we, like many other cities, try to revive our downtowns, it's important to remember to design our spaces for people over everything else. It's no surprise that people don't want to spend much time in an area with high volumes of vehicle traffic, and where more space is given to parked vehicles than the actual people who are using the space.

The choice ultimately comes down to you. Do you want to decide to let Main Street continue to be another bad example of car first street design, or do you want to be the ones who decided to do something different? You have the chance to create an iconic street in North America, one that people will visit Vancouver to see, and one that our fellow residents will be proud of and want to visit over and over. I urge you to do the latter, to leave a lasting legacy on this city and to let Vancouver live up to its true potential.

Best,
Eli Andrew

From:	Drennan, Kate
To:	Nischik, Julie
Subject:	FW: Main Street Promise
Date:	Monday, August 7, 2023 11:41:48 AM
Attachments:	Main Street Promise Project.docx

One more from a downtown retail org

Kate Drennan | Principal Transportation Planner
Pronouns: She/Her/Hers
CITY OF VANCOUVER, WASHINGTON
Community Development Department (CDD)
Desk: 360-487-7959 **Mobile:** 360-624-2958
www.cityofvancouver.us

From: Dollar, Sarah <Sarah.Dollar@cityofvancouver.us>
Sent: Monday, August 7, 2023 10:11 AM
To: Arenz, Julie <Julie.Arenz@cityofvancouver.us>; Drennan, Kate <Kate.Drennan@cityofvancouver.us>; Kennedy, Rebecca <Rebecca.Kennedy@cityofvancouver.us>; Lopossa, Ryan <ryan.lopossa@cityofvancouver.us>
Subject: FW: Main Street Promise

Please find the attached letter regarding the main street promise.

Thanks,

Sarah Dollar | Assistant to the City Council
CITY OF VANCOUVER, WASHINGTON
City Manager's Office
Pronouns: She/Her/Hers
www.cityofvancouver.us

From: Linda Glover <linda@divineconsignfurniture.org>
Sent: Friday, August 4, 2023 4:35 PM
To: Dollar, Sarah <Sarah.Dollar@cityofvancouver.us>
Subject: Main Street Promise

> You don't often get email from linda@divineconsignfurniture.org. Learn why this is important

CAUTION: This email originated from outside of the City of Vancouver. Do not click links or open attachments unless you recognize the sender and know the content is safe.

Sarah,

Could you, please, distribute this letter tot he City Council?

Thank you!
Linda

--

Linda Glover, Executive Director
Gifts For Our Community
904 Main Street Vancouver, WA 98660
Web: Divine Consign

Dear Members of the Vancouver City Council,

I am writing this statement as Executive Director of Divine Consign, the largest actively operating retail establishment on Main Street for the past 20 years. I wish to express our enthusiastic support for the Main Street Promise Project.

As stakeholders in the Main Street community, we are proud to have been a part of this vibrant neighborhood for two decades, witnessing its growth and transformation. We wholeheartedly believe in the potential of the Main Street Promise Project to uplift the corridor and create a more accessible, inviting, and thriving regional destination. We acknowledge the need for progress and improvements to ensure the continued prosperity of local businesses, and we are excited about the opportunities this project presents.

It is crucial to recognize that Main Street serves as a hub for not only Vancouver residents but also attracts visitors from neighboring areas, making it a regional destination. We have seen firsthand the significance of striking the right balance between pedestrian-friendly infrastructure and vehicular access. Many visitors and customers depend on vehicular transportation to reach our businesses and experience the unique offerings of Main Street.

In conclusion, we extend our full support to the Main Street Promise Project while advocating for a balanced and pedestrian-centered corridor. As the largest actively operating retail establishment on Main Street, we understand the significance of maintaining vehicular access to preserve the vitality and economic prosperity of this vibrant corridor. We look forward to collaborating with the City Council to ensure that this project becomes a resounding success, benefitting the entire community, and preserving the unique identity of Main Street.

Thank you for your time and consideration.

Sincerely,

Linda Glover

Executive Director, Divine Consign

From: Samin Sepasi
To: Hansen, Bart; Stober, Ty; Paulsen, Erik; Fox, Sarah; Perez, Diana; Harless, Kim; City of Vancouver - Office of the City Manager; McEnerny-Ogle, Anne; Transportation and Mobility Commission Agenda Calendar; Brum, Teresa; Arenz, Julie; Lopossa, Ryan; jirving@mackaysposito.com; Kennedy, Rebecca; Michael Walker; admin@vdausa.org; Cooley, William
Subject: Main St Promise Feedback
Date: Sunday, August 6, 2023 11:50:58 PM

Some people who received this message don't often get email from saminsepasi@gmail.com. Learn why this is important

CAUTION: This email originated from outside of the City of Vancouver. Do not click links or open attachments unless you recognize the sender and know the content is safe.

Hello all,

My name is Samin and I'm a Vancouver resident. I use walking and biking as my primary modes of transport. The time is now to decide whether we want to build a Vancouver for residents, families, visitors, or cars. I urge you all to consider closing off Main St to car traffic.

While we need to make sure everyone can access Main Street regardless of their mode of transport, the drawbacks of allowing vehicles on Main St far outweigh the benefits. We need to decide how we will set Vancouver apart as a destination for visitors and tourism, and all major destinations around the world have pedestrianized streets to draw in visitors.

Personally I can't tell you the last memorable street I visited and walked around in which had cars running through it. I don't feel safe in such streets, they're not enjoyable and I try and get in and out as fast as possible. Even currently I avoid dining at restaurants on Main Street due to the noise and pollution from cars. There are countless studies that show businesses in pedestrianized streets benefit greatly from increased foot traffic and more time spent by visitors in local shops and restaurants.

We need to keep the momentum of positive gains post Covid such as increases in space for outdoor dining, walking, and biking. Such space will encourage visitors to enjoy all that downtown has to offer and spend more time and money to also support local businesses. A pedestrianized street will be a huge boon for tourism and I ask you all to design a street for the future economic growth of Vancouver.

Thank you

From:	Jason Cromer
To:	Hansen, Bart; Stober, Ty; Paulsen, Erik; Fox, Sarah; Perez, Diana; Harless, Kim; City of Vancouver - Office of the City Manager; McEnerny-Ogle, Anne; Transportation and Mobility Commission Agenda Calendar; Brum, Teresa; Arenz, Julie; Lopossa, Ryan; Jason Irving; Kennedy, Rebecca; Michael Walker; admin@vdausa.org; Cooley, William
Subject:	Main Street Design Enhancements
Date:	Monday, August 7, 2023 2:32:59 PM

CAUTION: This email originated from outside of the City of Vancouver. Do not click links or open attachments unless you recognize the sender and know the content is safe.

Hi City Council members, Mayor Anne, and City Staff,

I wanted to raise a discussion on three aspects that are missing from the current design. These were raised by the Transportation and Mobility Commission, and are valid concerns that I believe should be addressed, regardless of the design that is used.

1. Mobility lanes - Design principles outlined in our TSP and national standards call for equitable share of the road for all users. The current design doesn't have any mobility lanes whatsoever. Sharrows on higher speed roads (Main Street) are not considered safe or appropriate for those bicycling or rolling in all age groups, especially given the 3% grade going north on Main Street. I personally wouldn't take my children, or even adult family members who are less experienced with bicycling, on a sharrow. The 7' sidewalks are too narrow for foot traffic, especially if you include those in wheelchairs. Furthermore, the current design will encourage bicyclists to use the sidewalk, which is not ideal given the small amount of width for pedestrians in the current design. I don't believe we should be pushing for a design where pedestrians, disabled folks, and bicyclists all share a small 7' sidewalk.
2. Physical Traffic Calming - The current design only utilizes passive traffic calming (narrower lanes, limited center stripe, different pavement materials), but there are zero proactive traffic calming tools in place. These usually include speed tables, chicanes, medians, and pinch-points. As seen with the installed speed tables on the new Waterfront, we know that this type of traffic calming is needed given the speed at which people drive. These treatments are much more expensive to add later, and much easier to add while we are repaving the street. Why wait until someone is severely injured or killed before adding speed tables? Let's be proactive and prevent injuries and deaths from happening from the get-go.
3. Automated Bollards - This is another feature that is much cheaper to install while the repavement is done, instead of as a later addition. This will allow safe street closures, and a smooth transition into an eventual car-free Main Street, as advertised by the Main Street Project team. The addition of these would simplify festival street closures, and remove the extra resourcing (staff and physical barriers) it would take for manual bollard implementations.

Main Street could be so much more, and offer an incredible experience for people visiting. I really hope the project team and the city staff take these design enhancements into consideration, as they would greatly improve street equity and safety for everyone traveling down Main Street. Thank you.

Best,
Jason

From:	Jason Cromer
To:	Hansen, Bart; Stober, Ty; Paulsen, Erik; Fox, Sarah; Perez, Diana; Harless, Kim; City of Vancouver - Office of the City Manager; McEnerny-Ogle, Anne; Transportation and Mobility Commission Agenda Calendar; Brum, Teresa; Arenz, Julie; Lopossa, Ryan; Jason Irving; Kennedy, Rebecca; Michael Walker; admin@vdausa.org; Cooley, William
Subject:	Main Street Promise Feedback
Date:	Monday, August 7, 2023 10:18:40 AM
Attachments:	West-Loop-Pedestrian-04.png

CAUTION: This email originated from outside of the City of Vancouver. Do not click links or open attachments unless you recognize the sender and know the content is safe.

Hello City Council members, Mayor Anne, and City Staff,

We're about to enter the year 2024, and one thing that's been at the forefront of urban design globally in the last decades, but especially since the Covid epidemic, has been removing cars from cities, and instead using that space for **people**.

Have you travelled outside of the US and gone to the popular places around the world? Barcelona, Munich, Kyoto, Utrecht, Vienna, Prague, Paris, Copenhagen, Oslo, Amsterdam, Tokyo, and small towns and villages all over the world? Any chance you've also been to an amusement park too, like the Enchanted Forest, or the world's most popular one: Disneyland?

People from around the world flock to these locations for many reasons, but they all have one thing in common: They have a focus on being car-free. The cities and towns mentioned above all have car-free town squares, streets, and/or entire districts. Amusement parks are entirely car-free and are quite literally modeled after car-free European cities. Why? Because these are places built for **people** to enjoy.

Now compare these examples to the new Main Street design. Over 54% of the width is allocated to vehicles, meanwhile pedestrians are squeezed into 7 feet of space, barely wide enough for two people to walk side-by-side. This isn't a revolutionary or bold new design, as is marketed, and it certainly isn't anything close to being a place for people to stay at and enjoy.

Studies have repeatedly shown that pedestrians and cyclists outspend those who drive. I understand the concern from businesses on Main that they fear losing their parking will be detrimental to their business. However, this is a misconception, and bears no truth. We should absolutely not be building infrastructure in our city based on the misconceptions of a handful of business owners, especially given the overwhelming abundance of data that proves contrary to their fears. The overwhelming response at the open houses, public response, social media, and the TMC meetings have been to build a car-free Main Street, yet the voice of the **people** of Vancouver are being completely ignored.
We see that car-free streets work in low density towns in the US, like Burlington Vermont, Charlottesville, Santa Barbara California, and Cumberland Maryland, just to name a few. We see that that work in medium density cities, like Boise Idaho, Riverside California, and Salt Lake City Utah. We see that they work in high density cities like San Francisco, New York, and Los Angeles.

We see that they work everywhere, because they create an environment that **draws people in**, and gets **people to stay**. This creates more foot traffic and generates more revenue for small

businesses, and it draws people in to stay for longer periods of time. This is the opposite of what the current Main Street design accomplishes, and it is precisely why Main Street has performed so poorly in the past.

I've heard members of the project team say that this opens the door for a car-free Main Street in the future. To that I ask: Why not start now while we have a clean slate?
The issue with building a car-centric street now is that if we do decide to shut it down to cars in the future, we will still have a 40-foot concrete desert in the center of Main Street. That is not a pleasing place for pedestrians. Let's use the one opportunity that we have for the next **50+ years** to design a place that is pleasing for **people**, not just cars, and create a design that is truly innovative, bold, and in line with our city goals. Otherwise, we are just wasting 20 million dollars on a repavement that will continue to see Main Street businesses suffer.

Below are some images of car-free Main Streets in cities across the US. There's no debate that anyone would rather be at any of these places than the new Main Street design. Why? Because the places below are built for **people**, not cars.

Best,
Jason

PARAMOUNT
BLACK MARIA
FILM FESTIVAL

DENVER

Chris Foye
IMAGES

BANANA REPUBLIC
INFORMATION
THE SKINNY PANCAKE
Hatley
ARISTELLE
Bra Fitting
&
Fine
Lingerie

From:	Dev
To:	Hansen, Bart; Stober, Ty; Paulsen, Erik; Fox, Sarah; Perez, Diana; Harless, Kim; City of Vancouver - Office of the City Manager; McEnerny-Ogle, Anne; Transportation and Mobility Commission Agenda Calendar; Brum, Teresa; Arenz, Julie; Lopossa, Ryan; jirving@mackaysposito.com; Kennedy, Rebecca; Michael Walker; admin@vdausa.org; Cooley, William
Subject:	Main Street Promise Project
Date:	Saturday, August 5, 2023 10:42:23 PM

Some people who received this message don't often get email from devlordofpings@gmail.com. Learn why this is important

CAUTION: This email originated from outside of the City of Vancouver. Do not click links or open attachments unless you recognize the sender and know the content is safe.

Hi City Staff and City Council members,

I am writing to you today to ask you to please reconsider the Main Street design. The design that is currently proposed fundamentally lacks one core thing: A space for pedestrians.

Main Street has suffered for decades due to the car-centric nature of the street design, and the new design doesn't change a thing about that. Cities all over are switching over to a car free environment where there is retail, and they've been a resounding success.

I can tell you right now, my daughters do not feel welcome or safe on Main Street. Cars whiz by quickly, and people have a complete disregard for other human life when they're driving. Coming from a small Appalachian town with a car free main street, I can tell you that the comfort that people and their families experience there is unparalleled. If you have a moment, please take a look at Cumberland Maryland and see what a small, rural town has done to create a welcoming space for everyone.

I personally think the online documents are deceptive since they claim "safety" for "everyone". Where is the safety for the families and children that want to play and run around? Where is the safety for the folks bicycling (I saw absolutely no bicycle lanes in this new design)? When I look at the new design, I don't see safety at all. I see a place for people to speed and idle while they wait for parking when there are a million dang parking spots on the blocks nearby.

It's appalling to me that in this year, 2023, we have an opportunity to completely redo the Main Street, and all that we get is another road. When I last sat in on one of the presentations, one of your team members (Ryan L) mentioned the street will eventually be closed to cars. If that's the case, why design something half-baked instead of designing the street for how it will be used in the future? That kind of short-sighted thinking just doesn't sit well with me.

Please take this opportunity to do what other towns have done right: blocking the space off to cars and making the space open for pedestrians.
The otherwise complete waste of concrete could be utilized for food carts, more trees, seating, art, or a list of other things that bring people into the area for enjoyment, and bring people in to stay. The current design does not, and unfortunately it's not something I would bring my family to experience.

With kindness,

Dev

From:	Peter L. Fels
To:	Hansen, Bart; Stober, Ty; Paulsen, Erik; Fox, Sarah; Perez, Diana; Harless, Kim; City of Vancouver - Office of the City Manager; McEnerny-Ogle, Anne; Transportation and Mobility Commission Agenda Calendar; Brum, Teresa; Arenz, Julie; Lopossa, Ryan; jirving@mackaysposito.com; Kennedy, Rebecca; Michael Walker; admin@vdausa.org; Cooley, William
Cc:	Jan V; Jason Cromer; Heidi Cody; dan.packard@gmail.com; Amy Horstman; Wayne Nussbaum; peter@BikeClarkCounty.org; BCCShop; Don Steinke via 350.org Campaigns; zagatton@gmail.com; zefreak@gmail.com; Sara Schmit; Ken Williams; michael@opszero.com; israel@ilopez.com; Lisa Giacchino; Mike Farber; Samin Sepasi; Jim Thomas; Karissa Halstrom; Jim Byrne; billlait@gmail.com; Paul Sochacki; chaznw@gmail.com; Carole
Subject:	Main Street Promise
Date:	Sunday, August 6, 2023 10:46:52 PM

CAUTION: This email originated from outside of the City of Vancouver. Do not click links or open attachments unless you recognize the sender and know the content is safe.

Dear Mayor and Councilors,

Last week, along with many others, I testified at the Transportation and Mobility Commission regarding the current proposed redesign of Main Street. The proposal is unimaginative, a mere facelift that does nothing to modernize our city and fails to meet any of the goals of the Climate Action Framework.

Over the years, Main Street has lost almost all of its retail businesses. While there have been increases in downtown's vitality since the 1990s, cosmetic changes to the parking on Main Street are not going to make the street more attractive to pedestrians, cyclists or outside visitors. What is going to bring people to lower Main Street is a unique car-free experience where people can stroll or ride on a silent electric tram and children can play in a safe, tree lined environment.

I expect other commenters will send you examples of places that have converted streets to exclude private cars, such as Santa Barbara CA, Burlington VT. and various European cities. I have wandered in a number of car-free Italian city centers, Dublin, Barcelona, The Grove in Los Angeles, Third Street in Santa Monica and streets in Brooklyn that were temporarily closed to traffic. They all were crowded with people enjoying the experience, dining and shopping.

Vancouver has ambitious goals to reduce greenhouse gas emissions. To get there we need to reduce single occupancy vehicle traffic and increase pedestrian, bicycle and transit use. I have advocated for several years for establishment of a hop-on-hop-off electric tram that circulates along Main Street from the Waterfront to Fourth Plain as a way to get people out of their cars and to connect Uptown, Downtown, the Waterfront and soon, the Waterfront Gateway.

Lower Main Street with an increased tree canopy, a tram and limits on cars could help us move toward the Climate Action Framework's goals while showing that it is worth visiting.

Please tell City planners that the current proposal for Main Street Promise is backward thinking and should be replaced with a truly pedestrian friendly car-free design.

Thank you.

s/
Peter Fels
5121 NW Franklin St., Vancouver